ENGLISH ENGLISH ENGLISH ENGLISH

Installation and User Manual

version 1.09

WDOS-C

Load

SYMBOLS

Here are the symbols used in the manual to draw the reader's attention:

Caution! Risk of electric shock.

Caution! This operation must be performed by skilled personnel.

Pay particular attention to the following instructions.

Further information.

WARRANTY

24 months from the date of the delivery note. Warranty covers only failures of defective components (due to construction defects or defects in materials) and includes replacement or repair of the components and related labor costs.
Warranty is automatically forfeited in the event of:
- tampering, deletion, removal of the identification label and/or serial number of the product
- misuse, transformation, alteration, repair of products not carried out by Laumas personnel

Laumas provides a 1-year warranty from the date of the delivery note on defects in material or manufacture of the battery.

GUIDELINES FOR PROPER DISPOSAL

Sealed Lead Acid Battery Must be recycled Properly

This symbol on the product or packaging indicates that:
- This is electrical/electronic equipment and cannot be disposed of as municipal solid waste, but must be delivered to a recycling center
- Improper use or disposal can pollute the environment or damage human health
- Non-compliance with these guidelines will be penalized in accordance with the regulations in force in the country of destination
- It is recommended to dispose of the packing and packaging as required by local regulations

TABLE OF CONTENTS

USER WARNINGS 1
RECOMMENDATIONS FOR CORRECT INSTALLATION OF WEIGHING INSTRUMENTS . 1
RECOMMENDATIONS FOR CORRECT INSTALLATION OF THE LOAD CELLS 2
LOAD CELL INPUT TEST (QUICK ACCESS) 4
LOAD CELL TESTING 4
MAIN SPECIFICATIONS OF THE INSTRUMENT 5
BUFFER BATTERY 5
TECHNICAL SPECIFICATIONS 6
ELECTRICAL CONNECTIONS 7
BASIC INFORMATION 7
WIRING DIAGRAM 8
CHANGING VOLTAGE 115 VAC/230 VAC 8
INTRODUCTION TO THE OPERATION 9
LED AND KEY FUNCTIONS 10
MENU MAP (7 SEGMENT DISPLAY) 11
SYSTEM PARAMETERS 11
BATCHING CONSTANTS 12
LCD GRAPHIC DISPLAY 13
BASIC INFORMATION 13
LCD GRAPHIC DISPLAY CONFIGURATION 14
LANGUAGE SETTING 14
ANIMATION SETTING 15
CUSTOMIZING MESSAGES OF LCD GRAPHIC DISPLAY 15
INSTRUMENT COMMISSIONING 16
PROGRAMMING OF SYSTEM PARAMETERS 17
THEORETICAL CALIBRATION 17
TARE WEIGHT ZERO SETTING 18
ZERO VALUE MANUAL ENTRY 18
REAL CALIBRATION (WITH SAMPLE WEIGHTS) 18
FILTER ON THE WEIGHT 19
ANTI PEAK 20
ZERO PARAMETERS 20
RESETTABLE WEIGHT SETTING FOR SMALL WEIGHT CHANGES 20
AUTOMATIC ZERO SETTING AT POWER-ON 20
ZERO TRACKING 21
SETTING UNITS OF MEASURE 21
OUTPUTS AND INPUTS CONFIGURATION 21
SEMI-AUTOMATIC TARE (NET/GROSS) 22
PRESET TARE (SUBTRACTIVE TARE DEVICE) 23
SEMI-AUTOMATIC ZERO (WEIGHT ZERO-SETTING FOR SMALL VARIATIONS) 23
ANALOG OUTPUT(ONLY FOR INSTRUMENTS WHERE THIS OPTION IS AVAILABLE) .. 24

SERIAL COMMUNICATION SETTING 26
RS232 SERIAL COMMUNICATION *27*
RS485 SERIAL COMMUNICATION *27*
DIRECT CONNECTION BETWEEN RS485 AND RS232 WITHOUT CONVERTER *27*
WEIGHT READING VIA SERIAL PORT 28
WEIMOD MODE *28*
WEIRIP MODE *29*
RS485 CONNECTION *30*
RS232 CONNECTION *30*
ALARM RELAY CLOSURE 31
TEST 31
DATE AND TIME SETTING 31
OPERATION SETTINGS 32
INFO MENU 32
PROGRAMMING OF BATCHING CONSTANTS 33
MINIMUM WEIGHT 33
MAXIMUM WEIGHT 33
SAFE EMPTYING TIME 33
WAITING TIME 33
NO COMPARISON TIME 34
NO PRODUCT LOAD TIME 34
NO PRODUCT UNLOAD TIME 34
FALL 34
TOLERANCE 35
SLOW 35
TAPPING FUNCTION 36
AUTOTARE 36
AUTOTARE DELAY 36
STABLE TARE 36
PRINT AT CYCLE END 36
NUMBER OF BATCHING PRINTOUTS 37
CHECKING PC PRESENCE 37
WAITING CONFIRMATION FROM PC (SLAVE) 37
SWITCHING OF THE ALARM RELAY ON WEIGHT 37
SWITCHING OF THE TOLERANCE RELAY ON WEIGHT 37
FORMULAS PROGRAMMING 38
DELETING FORMULAS 38
BATCHING 39
BATCHING START FROM EXTERNAL CONTACT 40
DISPLAYING DURING BATCHING 41
PRODUCT DETAIL DISPLAY *41*
BATCHING STOP 41
RESUME BATCHING AFTER A POWER CUT 42

TOTALS MANAGEMENT 42
CONSUMPTION 42
PRODUCTION 43
STOCKS 43
ALARMS 45
PRINTING EXAMPLES 47
RESERVED FOR THE INSTALLER 50
MENU LOCKING 50
MENU UNLOCKING 50
TEMPORARY MENU UNLOCKING 50
SETTING UNLOCK PASSWORD 50
DATA DELETION AND PROGRAM SELECTION 50
KEYPAD OR DISPLAY LOCKING 52
DECLARATION OF CONFORMITY - EU 53
DECLARATION OF CONFORMITY - UKCA 54

USER WARNINGS

RECOMMENDATIONS FOR THE PROPER USE OF WEIGHING INSTRUMENT

- Keep away from heat sources and direct sunlight
- Repair the instrument from rain (except special IP versions)
- Do not wash with water jets (except special IP versions)
- Do not dip in water
- Do not spill liquid on the instrument
- Do not use solvents to clean the instrument
- Do not install in areas subject to explosion hazard (except special Atex versions)

RECOMMENDATIONS FOR CORRECT INSTALLATION OF WEIGHING INSTRUMENTS

The terminals indicated on the instrument's wiring diagram to be connected to earth must have the same potential as the weighed structure (same earthing pit or earthing system). If you are unable to ensure this condition, connect with an earthing wire the terminals of the instrument (including the terminal – SUPPLY) to the weighed structure.

The cell cable must be individually led to its panel input and not share a conduit with other cables; connect it directly to the instrument terminal strip without breaking its route with support terminal strips.

Use "RC" filters on the instrument-driven solenoid valve and remote control switch coils.

Avoid inverters in the instrument panel; if inevitable, use special filters for the inverters and separate them with sheet metal partitions.

The panel installer must provide electric protections for the instruments (fuses, door lock switch etc.).

It is advisable to leave the equipment always switched on to prevent the formation of condensation.

MAXIMUM CABLE LENGTHS

- RS485: 1000 metres with AWG24, shielded and twisted cables
- RS232: 15 metres for baud rates up to 19200
- Analog current output: up to 500 metres with 0.5 mm^2 cable
- Analog voltage output: up to 300 metres with 0.5 mm^2 cable

RECOMMENDATIONS FOR CORRECT INSTALLATION OF THE LOAD CELLS

SIZING OF LOAD CELLS CAPACITY

For safety reasons, in case of static weighing, it is advisable to use the load cells at a maximum of 70-80% of its nominal capacity (assuming that the load is uniformly distributed over the entire weighed structure); depending on the handling mode of the load to weigh, consider to further reduce the % of load with respect to the nominal capacity (ex.: forklifts handling, bridge cranes, etc.).

In case of weighing with dynamic loads, the installer has to estimate the thrust speed, the acceleration, the frequency, etc.

INSTALLING LOAD CELLS

The load cells must be placed on rigid, stable in-line structures; it is important to use the mounting modules for load cells to compensate for misalignment of the support surfaces.

PROTECTION OF THE CELL CABLE

Use water-proof sheaths and joints in order to protect the cables of the cells.

MECHANICAL RESTRAINTS (pipes, etc.)

When pipes are present, we recommend the use of hoses and flexible couplings with open mouthpieces with rubber protection; in case of hard pipes, place the pipe support or anchor bracket as far as possible from the weighed structure (at a distance at least 40 times the diameter of the pipe).

CONNECTING SEVERAL CELLS IN PARALLEL

Connect several cells in parallel by using - if necessary - a watertight junction box with terminal box. The cell connection extension cables must be shielded, led individually into their piping or conduit and laid as far as possible from the power cables (in case of 4-wire connections, use cables with 4x1 mm^2 minimum cross-section).

WELDING

Avoid welding with the load cells already installed. If this cannot be avoided, place the welder ground clamp close to the required welding point to prevent sending current through the load cell body.

WINDY CONDITIONS - KNOCKS – VIBRATIONS

The use of weigh modules is strongly recommended for all load cells to compensate for misalignment of the support surfaces. The system designer must ensure that the plant is protected against lateral shifting and tipping relating to: shocks and vibration; windy conditions; seismic conditions in the installation setting; stability of the support structure.

EARTHING THE WEIGHED STRUCTURE

By means of a copper wire with suitable cross-section, connect the cell upper support plate with the lower support plate, then connect all the lower plates to a single earthing system. Electrostatic charges accumulated because of the product rubbing against the pipes and the weighed container walls are discharged to the ground without going through or damaging the load cells. Failure to implement a proper earthing system might not affect the operation of the weighing system; this, however, does not rule out the possibility that the cells and connected instrument may become damaged in the future. It is forbidden to ensure earthing system continuity by using metal parts contained in the weighed structure.

FAILURE TO FOLLOW THE INSTALLATION RECOMMENDATIONS WILL BE CONSIDERED A MISUSE OF THE EQUIPMENT

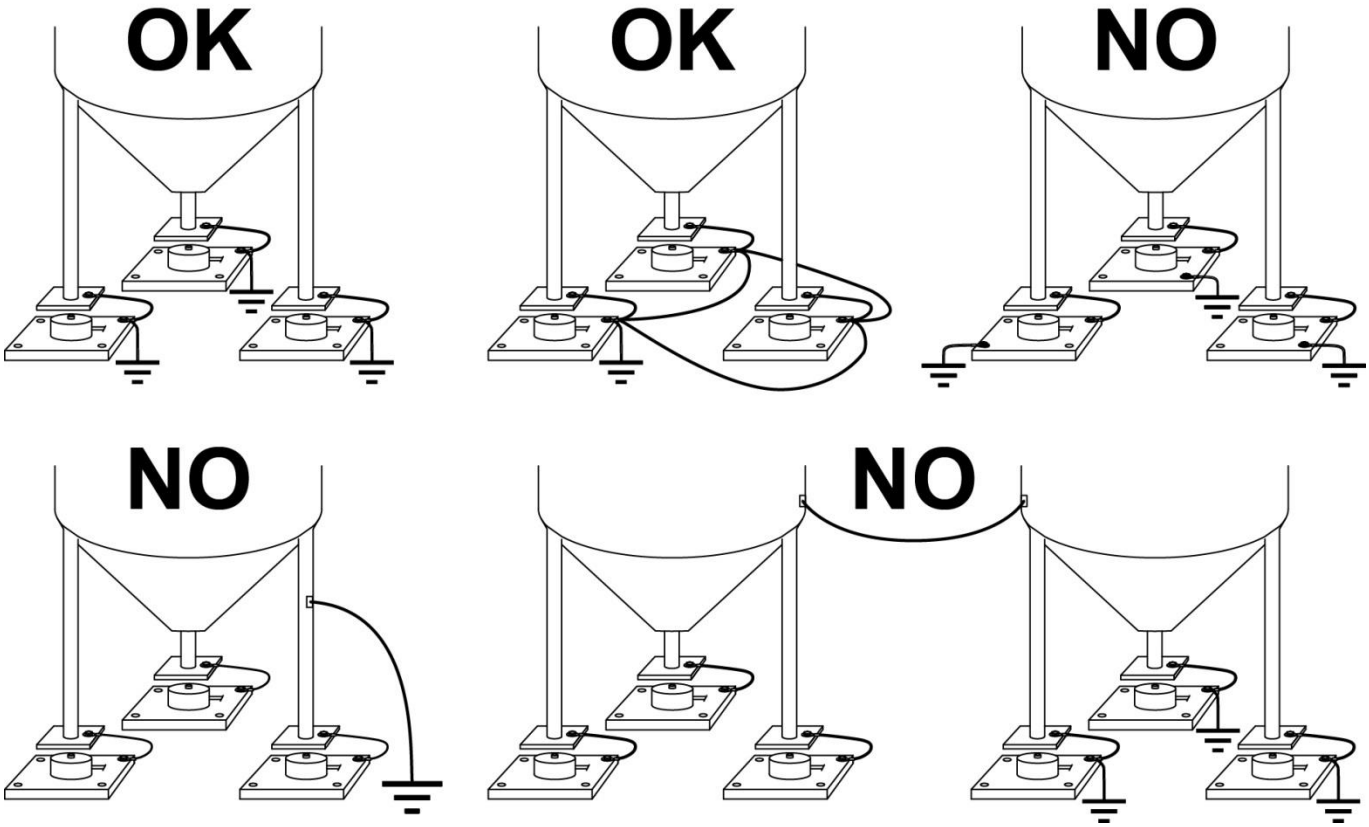

LOAD CELL INPUT TEST (QUICK ACCESS)

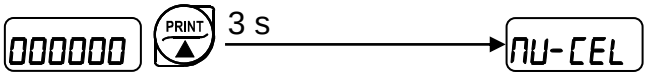

From the weight display, press ▲ for 3 seconds; the response signal of the load cells is displayed, expressed in mV with four decimals.

LOAD CELL TESTING

Load cell resistance measurement (use a digital multimeter):

- Disconnect the load cells from the instrument and check that there is no moisture in the cell junction box caused by condensation or water infiltration. If so, drain the system or replace it if necessary.
- The value between the positive signal wire and the negative signal wire must be equal or similar to the one indicated in the load cell data sheet (output resistance).
- The value between the positive excitation wire and the negative excitation wire must be equal or similar to the one indicated in the load cell data sheet (input resistance).
- The insulation value between the shield and any other cell wire and between any other cell wire and the body of the load cell must be higher than 20 Mohm.

Load cell voltage measurement (use a digital multimeter):

- Take out the load cell to be tested from underneath the container, or alternatively, lift the container support.
- Make sure that the excitation of two wires of the load cell connected to the instrument (or amplifier) is 5 VDC ±3%.
- Measure the response signal between the positive and the negative signal wires by directly connecting them to the tester, and make sure that it is comprised between 0 and ±0.5 mV.
- Apply load to the cell and make sure that there is a signal increment.

IF ONE OF THE ABOVE CONDITIONS IS NOT MET, PLEASE CONTACT THE TECHNICAL ASSISTANCE SERVICE.

MAIN SPECIFICATIONS OF THE INSTRUMENT

Indicator with 6-wire load cell input in DIN box (96x96x130 mm; drilling template 91x91 mm) for panel front mounting. Front panel protection rating IP54 (IP65 front optional). STN transmissive LCD graphic display, white on blue, 128x64 pixel resolution, backlit, 60x32 mm viewing area. 6-digit semialphanumeric display, 10 mm, 7 segments; 8 indicator LEDs. 10-key membrane keypad with buzzer. Real-time clock/calendar with buffer battery.

Two serial ports (RS485 and RS232) for connection to: PC/PLC up to 32 instruments (max 99 with line repeaters) by ASCII Laumas or ModBus RTU protocol, remote display, printer. Optional: integrated Profibus DP, DeviceNet, CANopen, Profinet IO, Ethernet/IP, Ethernet TCP/IP, Modbus TCP output.

The instrument can be connected to a CLM serie intelligent junction box or to a weight transmitter.

BUFFER BATTERY

The instrument is equipped with an internal battery that allows to keep active the internal clock even in the event of power failure.

At the first start and after long periods of inactivity, leave the instrument on for at least 12 hours to fully charge the battery.

TECHNICAL SPECIFICATIONS

POWER SUPPLY and CONSUMPTION **(VDC)**	12/24 VDC (standard) ±10%; 5 W
POWER SUPPLY and CONSUMPTION **(VAC)**	115/230 VAC (optional); 50-60 Hz; 6 VA
NO. OF LOAD CELLS IN PARALLEL and SUPPLY	max 8 (350 ohm); 5 VDC / 120 mA
LINEARITY / ANALOG OUTPUT LINEARITY	< 0.01% F.S.; < 0.01% F.S.
THERMAL DRIFT / ANALOG OUTPUT THERMAL DRIFT	< 0.0005% F.S./°C; < 0.003% F.S./°C
A/D CONVERTER	24 bit (16000000 points)
MAX DIVISIONS (with measurement range: ±10 mV = sens. 2 mV/V)	±999999
MEASUREMENT RANGE	±39 mV
MAX SENSITIVITY OF USABLE LOAD CELLS	±7 mV/V
MAX CONVERSIONS PER SECOND	300 conversions/second
DISPLAY RANGE	±999999
NO. OF DECIMALS / DISPLAY INCREMENTS	0÷4 / x 1 x 2 x 5 x 10 x 20 x 50 x 100
DIGITAL FILTER / READINGS PER SECOND	10 levels / 5÷300 Hz
RELAY OUTPUTS	N. 5 - max 115 VAC; 150 mA (N. 4 – analog output version)
DIGITAL INPUTS	N. 3 - optoisolated 5 - 24 VDC PNP (N. 2 – analog output version)
SERIAL PORTS	RS485, RS232
BAUD RATE	2400, 4800, 9600, 19200, 38400, 115200
HUMIDITY (non condensing)	85%
STORAGE TEMPERATURE	-30°C +80°C
WORKING TEMPERATURE	-20°C +60°C
OPTOISOLATED ANALOG OUTPUT (OPTIONAL) 16 bit - 65535 divisions	0÷20 mA; 4÷20 mA (max 300 ohm); 0÷10 V; 0÷5 V; ±10 V; ±5 V (min 10 kohm).

c UL us	RELAY OUTPUTS	N. 5 - max 30 VAC, 60 VDC; 150 mA (N. 4 – analog output version)
	WORKING TEMPERATURE	-20°C +50°C
	Equipment to be powered by 12-24 VDC LPS or Class 2 power source.	

ELECTRICAL CONNECTIONS

TERMINALS LEGEND

1	+SUPPLY (12/24 VDC) **115/230 VAC optional version:** +OUTPUT (24 VDC)	15	OUTPUT No 5: TOLERANCE *otherwise:* +ANALOG OUTPUT (0÷10 V)
2	-SUPPLY (12/24 VDC) RS232, RS485: SHIELD, GND E/EC OPTION: GND **115/230 VAC optional version:** -OUTPUT (24 VDC) RS232, RS485: SHIELD, GND E/EC OPTION: GND	16	E/EC OPTION *otherwise:* -COMUNE USCITA ANALOGICA
3	RS232: TXD	17	RS485: -
4	RS232: RXD	18	RS485: +
5	OUTPUT No 1: PRESET	19	-LOAD CELL EXCITATION (-Exc) LOAD CELL SHIELD
6	OUTPUT No 2: SET	20	+LOAD CELL EXCITATION (+Exc)
7	OUTPUT No 3: CYCLE END	21	+LOAD CELL REF / SENSE
8	OUTPUT No 4: ALARM	22	-LOAD CELL REF / SENSE
9	OUTPUT COMMON	23	-LOAD CELL SIGNAL (-Sig)
10	INPUT No. 1: START (+VDC min 5 V max 24 V)	24	+LOAD CELL SIGNAL (+Sig)
11	INPUT No. 2: STOP (+VDC min 5 V max 24 V)	L	PHASE **(115/230 VAC optional version)**
12	INPUT COMMON (-VDC 0 V)	N	NEUTRAL **(115/230 VAC optional version)**
13		⏚	GROUND **(115/230 VAC optional version)**
14	INPUT No 3: selectable (+VDC min 5 V max 24 V) *otherwise:* +ANALOG OUTPUT (0÷20 or 4÷20 mA)		

BASIC INFORMATION

- It is recommended that the power supply negative pole be grounded.
- It is possible to supply up to eight 350 ohm load cells or sixteen 700 ohm load cells.
- For 4-wire load cells, make a jumper between EX- and REF- and between EX+ and REF+.
- Connect terminal "– SUPPLY" to the RS485 common of the connected instruments in the event that these receive alternating current input or that they have an optoisolated RS485.
- In case of an RS485 network with several devices it is recommended to activate the 120 ohm termination resistance on the two devices located at the ends of the network, as described in section **RS485 SERIAL CONNECTION.**
- Option **E/EC**: selects the first 12 formulas.

WIRING DIAGRAM

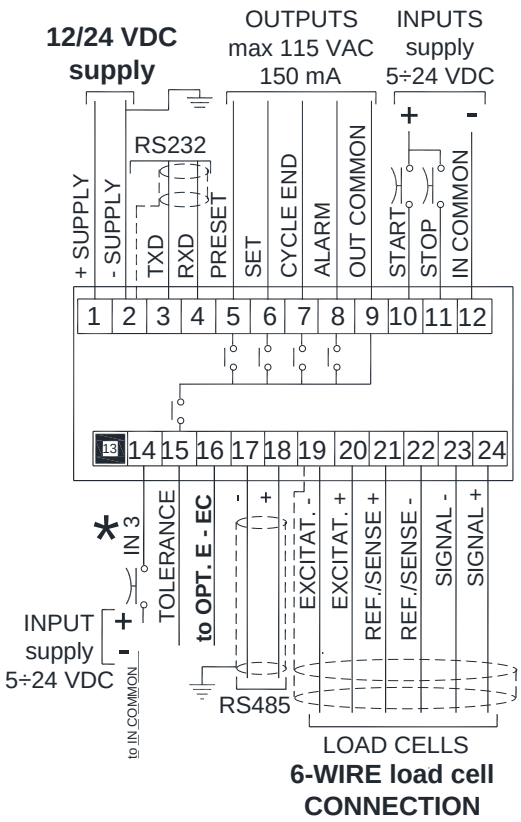

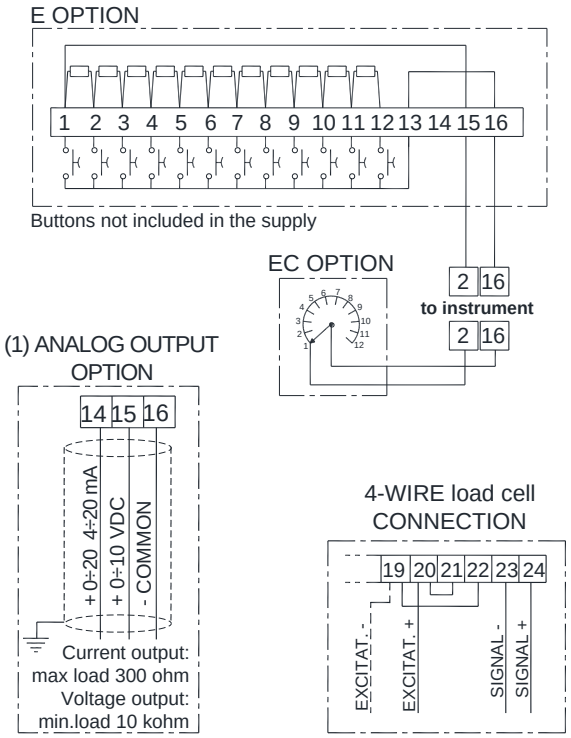

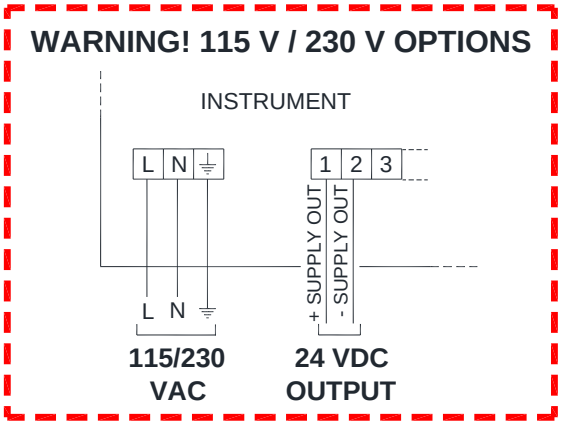

★) The **IN3** input can have the following functions:
- **APPROVAL**
- **SEMI-AUTOMATIC ZERO** (default)
- **NET/GROSS WEIGHT**

(1) If the analog output is present (ANALOG OUTPUT OPTION) the following are no longer available:
- **IN3** input
- **TOLERANCE** output
- **E/EC** options

WARNING: connect power supply specified on the plate found on the back of the instrument.
In 115 V and 230 V versions, terminals "+ SUPPLY" and "– SUPPLY" generate continuous voltage at 24 VDC only to be used as power supply for instrument inputs.

CHANGING VOLTAGE 115 VAC/230 VAC

Remove the instrument power board and work on the welding side: join the red points using a stiff wire.

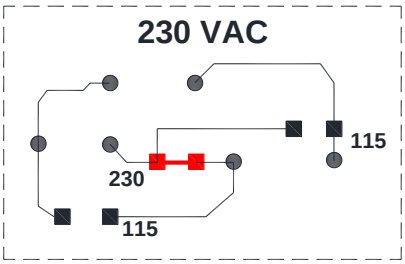

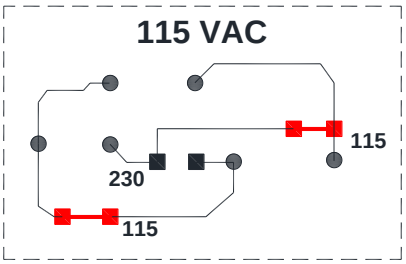

INTRODUCTION TO THE OPERATION

The instrument is able to load automatically a settable amount of product on the weighing structure, driving the batching organ (including two-speed) through the PRESET and SET contacts.
The instrument has the following features:

- Maximum 99 settable formulas (see section **FORMULAS PROGRAMMING**);
- Batching resume after blackout (see section **RESUME BATCHING AFTER A POWER CUT**);
- Automatic fall calculation (see section **FALL**);
- Autotare at batching start (see section **AUTOTARE**);
- Tolerance error control (see section **TOLERANCE**);
- Precision batching through slow function (see section **SLOW**);
- Precision batching through tapping function (see section **TAPPING FUNCTION**);
- Consumption storage (see section **CONSUMPTION**);
- Production storage (see section **PRODUCTION**);
- Product stocks management (see section **STOCKS**);
- Print of batching data (see section **PRINT AT CYCLE END**);
- Alarm contact (see section **ALARM RELAY CLOSURE**);

BATCHING START:

- via keypad, setting formula and cycle number to be performed;
- via external contact (see section **BATCHING START FROM EXTERNAL CONTACT**).

For further information on the batching sequence, see section **BATCHING**.

CONSUMPTION:

The instrument, at the end of every batching, stores the consumed amount for each product (see section **CONSUMPTION**).

PRODUCTION:

The instrument, at the end of every batching, stores the batched amount for each formula (see section **PRODUCTION**).

STOCKS:

The instrument manages product stocks and if their value fall below the minimum set, it displays an alarm (see section **STOCKS**).

INSTRUMENT CALIBRATION:

The instrument calibration can be performed both with THEORETICAL CALIBRATION, setting the instrument full scale and the load cells sensitivity (see section **THEORETICAL CALIBRATION**), and with REAL CALIBRATION through SAMPLE WEIGHT (see section **REAL CALIBRATION (WITH SAMPLE WEIGHTS)**).

ALARM MANAGEMENT:

If an alarm occurs during the batching, the instrument shows the alarm on the display, closes the related contact (if enable) and waits for operator intervention to abort or continue the batching.

LED AND KEY FUNCTIONS

LED	Function
NET	net weight (semi-automatic tare or preset tare)
→0←	zero (deviation from zero not more than ±0.25 divisions)
◣◢	stability
kg	unit of measure: kg
g	unit of measure: g
W1	
W2	
W3	

KEY	Short press	Long press (3 s)	Into menus
→0← ESC	Semi-automatic zero	Tare resetting	Cancel or return to previous menu
TARE ◀	Gross → Net	Net → Gross	Select figure to be modified
START ▶	Batching start		Select figure to be modified
STOP ▼	Batching pause / stop		Modify figure or go to next menu item
PRINT ▲	Print menu	mV load cell test	Modify figure or go to previous menu item
MENU ENTER	Setting formulas and batching constants	Formula selection for START input (EC not present)	Confirm or enter in submenu
F1 F2 F3 F4	Context-sensitive function keys: see corresponding symbol on LCD display		Context-sensitive function keys: see corresponding symbol on LCD display
MENU ENTER + →0← ESC	Setting general parameters (press MENU ENTER immediately followed by →0← ESC)		
MENU ENTER + TARE ◀	Setting preset tare (press MENU ENTER immediately followed by TARE ◀)		

i Into menus LEDs light up in sequence to indicate that it is not displaying a weight.

MENU MAP (7 SEGMENT DISPLAY)

Into menus changes are applied right after pressing the ENTER key (no further confirmation is required).

SYSTEM PARAMETERS

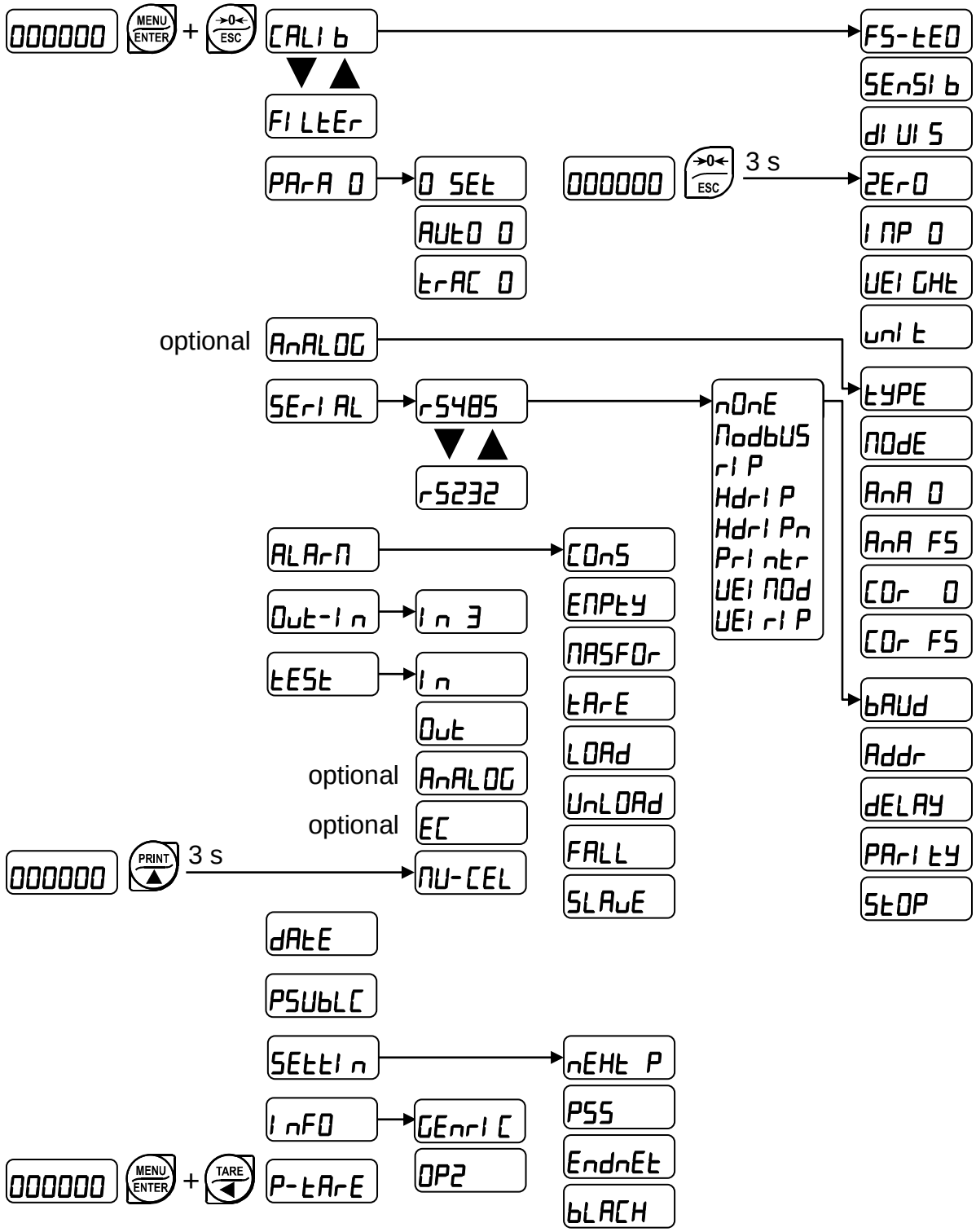

BATCHING CONSTANTS

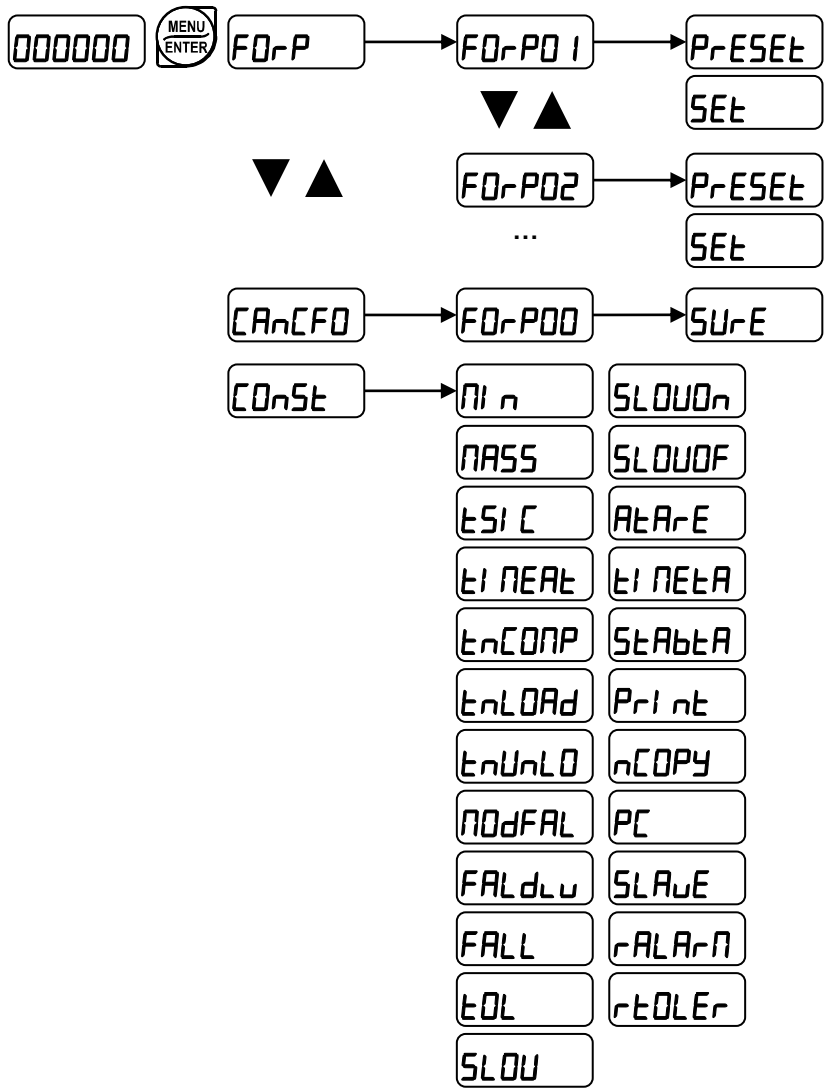

BASIC INFORMATION

Upon switch-on, the instrument shows system information on display.

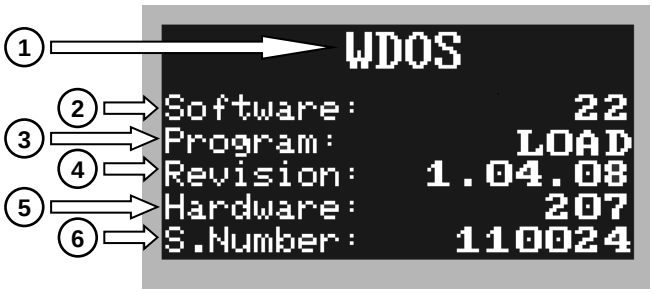

1) Instrument model;
2) Software code;
3) Program type;
4) Software version;
5) Hardware code;
6) Instrument serial number;

These information are required to request technical assistance.

As the start-up sequence is completed, if no error occurs, the instrument shows the main screen:

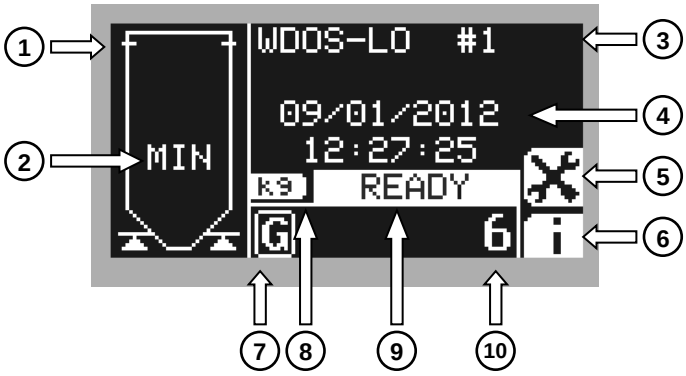

1) Scale;
2) Weight status;
3) Instrument or plant name;
4) Current date and time;
5) LCD display configuration menu;
6) System information display;
7) Gross weight symbol;
8) Unit of measure;
9) System status;
10) Weight value;

Scale: graphical display of system load status. To use this information properly, set the maximum weight (see section **MAXIMUM WEIGHT**).

Weight status: if weight is lower than the minimum value **MIN** appears, if it's higher than the maximum value **MAX** appears.

Instrument name: plant name is displayed (if set), otherwise instrument name and identification number are displayed. These information will be included in printouts.

System information display: Hold down the **i** function key to show system information; release it to return to previous screen.

LCD GRAPHIC DISPLAY CONFIGURATION

From the main screen press the function key to enter the LCD display configuration menu:

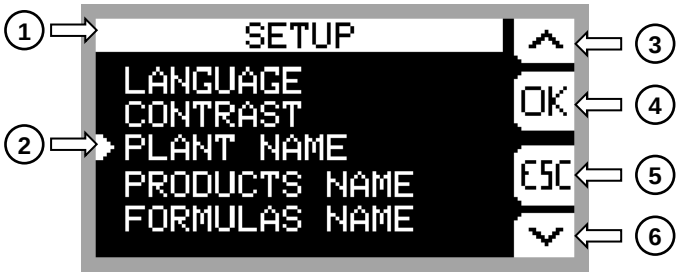

1) Heading;
2) Selected menu item;
3) Return to previous menu item;
4) Confirm selection;
5) Return to previous menu;
6) Go to next menu item;

The LCD display configuration menu is made by the following items:

- LANGUAGE
- CONTRAST
- PLANT NAME (the name set will be displayed and printed)
- PRODUCTS NAME (the name set will be displayed and printed)
- FORMULAS NAME (the name set will be displayed and printed)
- ANIMATION (allows you to modify the animation parameters)
- MSG JOLLY (messages customization, it appears only after having selected the JOLLY language)
- CONSUMPTION (see section **CONSUMPTION**)
- PRODUCTION (see section **PRODUCTION**)
- STOCKS (see section **STOCKS**)

LANGUAGE SETTING

The instrument supports several languages to show LCD display messages.

> LANGUAGE:

- ITALIANO; (default)
- ENGLISH;
- FRANÇAIS;
- ESPAÑOL;
- JOLLY;

"JOLLY" language: allows to customize the text of messages; it can also be loaded onto the instrument (via PC) specific character sets to write messages in other languages.
Selecting the JOLLY language another submenu appears:

> MSG JOLLY:

- EDIT MSG; (edit messages)
- RESET MSG; (restore messages to their default values in english)

ANIMATION SETTING

During the batching the LCD display shows the animation of a tank, where the level of the product increases or decreases; this setting allows you to select the weight value to which the maximum level of the product refers.

> ANIMATION > FULL SCALE:

- CAPACITY: system full scale value or maximum weight set in the batching constants
- FORMULA (default): 110% of the SET value set in the selected formula

CUSTOMIZING MESSAGES OF LCD GRAPHIC DISPLAY

The instrument allows to edit messages in the following way:

> PLANT NAME

> PRODUCTS NAME

> FORMULAS NAME

> MSG JOLLY* > EDIT MSG (only after having selected the JOLLY language)

*) allows to edit all display messages

Select the message to edit, the following screen appears:

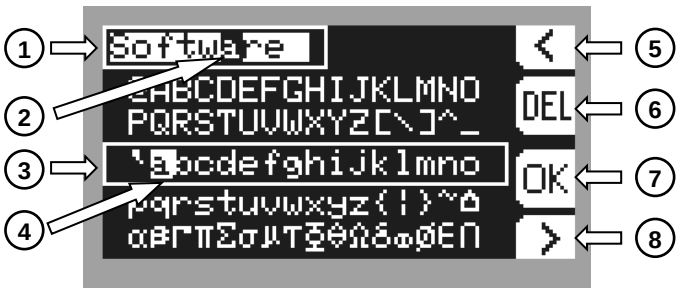

1) Message box;
2) Selected character;
3) Symbols selection area;
4) Selected symbol;
5) Return to previous character;
6) Delete selected character;
7) Confirm changes;
8) Go to next character;

Symbols selection area: move cursor within the symbols selection area using the following keys.

- Press ▲ or ▼ to move vertically;
- Press ◀ or ▶ to move horizontally;
- Press ENTER to confirm selected symbol and go to next character;
- Press ESC to cancel changes and return to previous screen;

Selected character: the character currently being edited is indicated by the blinking cursor inside the message box;

Selected symbol: the currently selected symbol is indicated by the blinking cursor inside the symbols selection area.

INSTRUMENT COMMISSIONING

Upon switch-on, the display shows in sequence:
- 111111 → 999999 (ONLY in case of approved program);
- instrument model (e.g.: UdO5);
- SU followed by the software code (e.g.: SU 22);
- program type: bASE (base); LOAd; UnLOAd; 3PrOd; 6PrOd; 14PrOd; nULtI (no active program);
- r followed by the software version (e.g.: r 1.08.00);
- HU followed by the hardware code (e.g.: HU 207);
- serial number (e.g.: 1005 15);

Check that the display shows the weight and that when loading the load cells there is an increase in weight. If there is not check and verify the connections and correct positioning of the load cells.

- **If the instrument has already been theoretical CALIBRATED** (plant system identification tag present on the instrument and on the cover: load cell's rated data already entered):
  - Reset to zero (see section **TARE WEIGHT ZERO SETTING**)
  - Check the calibration with sample weights and correct the indicated weight if necessary (see section **REAL CALIBRATION (WITH SAMPLE WEIGHTS)**).

- **If the instrument HAS NOT BEEN CALIBRATED** (missing plant system identification tag) proceed with calibration:
  - If load cells data are unknown, follow the procedure in section **REAL CALIBRATION (WITH SAMPLE WEIGHTS)**
  - Enter the rated data of load cells following the procedure given in section **THEORETICAL CALIBRATION**
  - Reset to zero (see section **TARE WEIGHT ZERO SETTING**)
  - Check the calibration with sample weights and correct the indicated weight if necessary (see section **REAL CALIBRATION (WITH SAMPLE WEIGHTS)**).

- If you use the analog output, set the desired analog output type and the full scale value (see section **ANALOG OUTPUT**).
- If you use serial communication, set the related parameters (see section **SERIAL COMMUNICATION SETTING**).
- Set instrument's clock with current date and time (see section **DATE AND TIME SETTING**)

Required settings for the first batching:
- Access the Batching Constants menu and set the minimum weight value (see section **MINIMUM WEIGHT**);
- Access the System Parameter menu and set the PSS parameter (see section **OPERATION SETTINGS**);
- Access the Formulas menu and set the formula 01 (see section **FORMULAS PROGRAMMING**);
- Start the batching by pressing the START button or by closing the START contact

PROGRAMMING OF SYSTEM PARAMETERS

From the weight display, press simultaneously keys MENU and ESC to access the parameter setting.

MENU/ENTER: to enter a menu/confirm the data entry.
▲ ▼: to modify the displayed value or menu item.
◀ ▶: to select a new figure.
ESC: to cancel and return to the previous menu.

THEORETICAL CALIBRATION

000000 [MENU/ENTER] + [→0←/ESC] CALIb [MENU/ENTER] FS-tEO [MENU/ENTER] SEnSIb [MENU/ENTER] diUIS

This function allows the load cell rated values to be set.

To perform the theoretical calibration set the following parameters in sequence:

- FS-tEO (default: dEMo)**:** the **system full scale** is given by one cell capacity multiplied by the number of cells used. Example: 4 cells of 1000 kg → FULL SCALE = 1000 x 4 = 4000. The instrument is supplied with a theoretical full scale value dEMO corresponding to 10000. To restore factory values, set 0 as full scale.
- SEnSIb (default: 2.00000 mV/V): **sensitivity** is a load cell rated parameter expressed in mV/V. Set the average sensitivity value indicated on the load cells. It's possible to set a value between 0.50000 and 7.00000 mV/V. Example of 4-cell system with sensitivity: 2.00100, 2.00150, 2.00200, 2.00250; enter 2.00175, calculated as (2.00100 + 2.00150 + 2.00200 + 2.00250) / 4.
- diUIS: the **division** (resolution) is the minimum weight increment value which can be displayed. It is automatically calculated by the system according to the performed calibration, so that it is equal to 1/10000 of full scale. It can be changed and be variable between 0.0001 and 100 with x1 x2 x5 x10 increments.

- By modifying the full scale or the sensitivity, the real calibration is cancelled and the theoretical calibration only is considered valid.
- If the theoretical full scale and the recalculated full scale in real calibration (see section **REAL CALIBRATION (WITH SAMPLE WEIGHTS)**) are equal, this means that the calibration currently in use is theoretical; if they are different, the calibration in use is the real calibration based on sample weights.
- By modifying the theoretical full scale, the system's parameters containing a weight value will be set to default values.

TARE WEIGHT ZERO SETTING

000000 MENU/ENTER + →0← ESC CALIb MENU/ENTER FS-tEO ▼ ▲ 2Er0

This menu may also be accessed directly from the weight display, holding down the →0← key for 3 seconds.

Perform this procedure after having set the THEORETICAL CALIBRATION data.

Use this function to set to zero the weight of the empty system after commissioning and then later on to compensate zero variations due to the presence of product residues.
Procedure:

- Confirm the message 2Er0 by pressing ENTER.
- The weight value to be set to zero is displayed. In this phase all of the LEDs are flashing.
- Confirming once again, the weight is set to zero (the value is stored to the permanent memory).
- Press ▲ to display the value of the total weight reset by the instrument, given by the sum of all of the previous zero settings.

ZERO VALUE MANUAL ENTRY

000000 MENU/ENTER + →0← ESC CALIb MENU/ENTER FS-tEO ▼ ▲ INP 0

WARNING: Perform this procedure only if it's not possible to reset the weighed structure tare, for example because it contains product that can not be unloaded.

Set in this parameter the estimated zero value (from -999999 to 999999; default: 0).

REAL CALIBRATION (WITH SAMPLE WEIGHTS)

000000 MENU/ENTER + →0← ESC CALIb MENU/ENTER FS-tEO ▼ ▲ UEIGHt

After having performed the THEORETICAL CALIBRATION and TARE WEIGHT ZERO SETTING, this function allows correct calibration to be done using sample weights of known value and, if necessary, any deviations of the indicated value from the correct value to be corrected.

Load onto the weighing system a sample weight, which must be **at least 50%** of the maximum quantity to be weighed.
By confirming the message UEIGHt the flashing value of the weight currently on the system is displayed. In this phase all of the LEDs are off. Adjust the value on display by using the arrow keys if necessary. After confirming, the new set weight will appear with all the LEDs flashing.
After an additional confirmation, the message UEIGHt will be restored and by repeatedly pressing the key ESC the weight will once again be displayed.

Example: for a system of maximum capacity 1000 kg and 1 kg division, two sample weights are available, one of 500 kg and the other one of 300 kg. Load both weights onto the system and correct the indicated weight to 800. Now remove the 300 kg weight, the system must show 500; remove the 500 kg weight, too; the system must read zero. If this does not happen, it means that there is a mechanical problem affecting the system linearity.

WARNING: identify and correct any mechanical problems before repeating the procedure.

- If theoretical full scale and recalculated full scale in real calibration are equal, it means that the theoretical calibration is currently in use; otherwise, the real calibration based on sample weights is in use.
- If the correction made changes the previous full scale for more than 20%, all the parameters with settable weight values are reset to default values.

LINEARISATION OPTION ON MAX 8 POINTS:
It is possible to perform a linearisation of the weight repeating the above-described procedure up to a maximum of eight points, using eight different sample weights. The procedure ends by pressing the ESC **button or after entering the eighth value;** at this point it will no longer be possible to change the calibration value, but only to perform a new real calibration. To perform a new calibration, should return to the weight display and then re-entering into the calibration menu.
By pressing ▲ after having confirmed the sample weight that has been set, the full scale appears, recalculated according to the value of the maximum sample weight entered and making reference to the cell sensitivity set in the theoretical calibration (SEnSI b).

FILTER ON THE WEIGHT

000000 MENU/ENTER + →0← ESC CALI b ▼ ▲ FI LtEr

Setting this parameter allows a stable weight display to be obtained.

To increase the effect (weight more stable) increase the value (from 0 to 9, default 4).
As seen in the diagram:
- By confirming the FI LtEr message, the currently programmed filter value is displayed.
- By changing and confirming the value, the weight is displayed and it will be possible to experimentally verify its stability.
- If stability is not satisfactory, confirming brings back the message FI LtEr and the filter may be modified again until an optimum result is achieved.

The filter enables to stabilise a weight as long as its variations are smaller than the corresponding "response time". It is necessary to set this filter according to the type of application and to the full scale value set.

FILTER VALUE	Response times [ms]	Display and serial port refresh frequency [Hz]
0	12	300
1	150	100
2	260	50
3	425	25
4 (default)	850	12.5
5	1700	12.5
6	2500	12.5
7	4000	10
8	6000	10
9	7000	5

ANTI PEAK

When the weight is stable, the anti peak filter removes any sudden disturbances with a maximum duration of 1 second. Confirm the filter on the weight with ENTER and select one of the following options:

- AntPOn: anti peak filter enabled (default);
- AntPOF: anti peak filter disabled.

ZERO PARAMETERS

000000 MENU/ENTER + →0← ESC CALIb ▼ ▲ PArA 0

RESETTABLE WEIGHT SETTING FOR SMALL WEIGHT CHANGES

0 SEt (from 0 to full scale; default: 300; considered decimals: 300 – 30.0 – 3.00 – 0.300): this parameter indicates the maximum weight value resettable by external contact, keypad or serial protocol.

AUTOMATIC ZERO SETTING AT POWER-ON

AUtO 0 (from 0 to 10% of full scale; default: 0): If at switch-on the weight value is lower than the value set in this parameter, the weight is reset. To disable this function, set 0.

ZERO TRACKING

trAC 0 (from 1 to 5, default: nOnE): When the weight value is stable and, after a second, it deviates from zero by a figure in divisions smaller or equal to the figure in divisions set in this parameter, the weight is set to zero. To disable this function, set nOnE.
Example: if the parameter dI UI 5 is set to 5 and trAC 0 is set to 2, the weight will be automatically set to zero for variations smaller than or equal to 10 (dI UI 5 x trAC 0).

SETTING UNITS OF MEASURE

000000 MENU/ENTER + →0← ESC CALI b MENU/ENTER FS-tE0 ▼ ▲ unI t

These are the available units of measure:

HI LOG: kilograms
G: grams
t: tons
Lb: pounds
nEUton: newtons
LI trE: litres
bAr: bars
AtM: atmospheres
PI ECE: pieces
nEU-M: newton metres
HI LO-M: kilogram metres
OtHEr: other generic units of measure not included in the list

On LCD display there is always a symbol of current unit of measure.
If the print function is enabled, the symbol corresponding to the selected unit of measure will be printed after the measured value.

OUTPUTS AND INPUTS CONFIGURATION

000000 MENU/ENTER + →0← ESC CALI b ▼ ▲ Out-In MENU/ENTER In 3

OUTPUTS

- OUTPUT 1: PRESET (for operation see **OPERATION SETTINGS**)
- OUTPUT 2: SET (for operation see **OPERATION SETTINGS**)
- OUTPUT 3: CYCLE END (the relay is closed to the achievement of Cycle End)
- OUTPUT 4: ALARM (the relay is closed when an alarm is present)
- OUTPUT 5: TOLERANCE (the relay is closed when the weight is out of tolerance)

INPUTS

- INPUT 1: START
- INPUT 2: STOP
- INPUT 3 (default = 2Er0): It's possible to select one of the following functions:
  - nE-L0 (NET/GROSS): by closing this input for no more than one second, it's making an operation of SEMI-AUTOMATIC TARE and the display will show the net weight. To display the gross weight again, hold the NET/GROSS input closed for 3 seconds.
  - 2Er0 (SEMI-AUTOMATIC ZERO): by closing the input for no more than one second, the weight is set to zero (see section **SEMI-AUTOMATIC ZERO (WEIGHT ZERO-SETTING FOR SMALL VARIATIONS)**).
  - C0n5 (APPROVAL): the instrument starts the batching only after verifying that this input is closed.

SEMI-AUTOMATIC TARE (NET/GROSS)

THE SEMI-AUTOMATIC TARE OPERATION IS LOST UPON INSTRUMENT POWER-OFF.

To perform a net operation (SEMI-AUTOMATIC TARE), close the NET/GROSS input or press the TARE key for less than 3 seconds. The instrument displays the net weight (just set to zero) and the NET LED lights up. To display the gross weight again, keep the NET/GROSS input closed or press TARE for 3 seconds.
This operation can be repeated many times by the operator to allow the loading of several products.

On LCD display the gross weight displaying is maintained, while on the 7 segments display the net weight is displayed:

1) Scale;
2) Weight status;
3) Gross weight value;
4) Instrument or plant name;
5) Current date and time;
6) LCD display configuration menu;
7) System information display;
8) Net weight value;

Example:
Put the box on the scale, the display shows the box weight; press TARE, the display shows the net weight to zero; introduce the product in the box, the display shows the product weight. This operation can be repeated several times.

The semi-automatic tare operation is not allowed if the gross weight is zero.

PRESET TARE (SUBTRACTIVE TARE DEVICE)

000000 MENU ENTER + TARE P-tArE

It is possible to manually set a preset tare value to be subtracted from the display value provided that the P-tArE ≤ max weight condition is verified.

By default the instrument shows the last programmed preset tare value: to apply it press ▲ and then ENTER.
After setting the tare value, going back to the weight display, the display shows the net weight (subtracting the preset tare value) and the NET LED lights up to show that a tare has been entered.

On LCD display the gross weight displaying is maintained, while on the 7 segments display the net weight is displayed (see section **SEMI-AUTOMATIC TARE**).

To delete a preset tare and return to gross weight display, hold down TARE for about 3 seconds or keep the NET/GROSS input (if any) closed for the same length of time (3 seconds). The preset tare value is set to zero. The NET LED is turned off when the gross weight is displayed once again.

- **IF A SEMI-AUTOMATIC TARE (NET) IS ENTERED, IT IS NOT POSSIBLE TO ACCESS THE ENTER PRESET TARE FUNCTION.**
- **IF A PRESET TARE IS ENTERED, IT'S STILL POSSIBLE TO ACCESS THE SEMI-AUTOMATIC TARE (NET) FUNCTION. THE TWO DIFFERENT TYPES OF TARE ARE ADDED.**

ALL THE SEMI-AUTOMATIC TARE (NET) AND PRESET TARE FUNCTIONS WILL BE LOST WHEN THE INSTRUMENT IS TURNED OFF.

SEMI-AUTOMATIC ZERO (WEIGHT ZERO-SETTING FOR SMALL VARIATIONS)

By closing the SEMI-AUTOMATIC ZERO input, the weight is set to zero; alternatively, by pressing the →0← key for less than 3 seconds, the StOrEP message is displayed for 3 seconds, by pressing ENTER the weight is set to zero.
This function is only allowed if the weight is lower than the 0 SEt value (see section **RESETTABLE WEIGHT SETTING FOR SMALL WEIGHT CHANGES**), otherwise the alarm E----- appears and the weight is not set to zero.

ANALOG OUTPUT(ONLY FOR INSTRUMENTS WHERE THIS OPTION IS AVAILABLE)

000000 MENU ENTER + →0← ESC CALIb ▼ ▲ AnALOG

- tYPE: it selects the analog output type (4÷20 mA, 0÷20 mA, 0÷10 V, 0÷5 V, ±10 V, ±5 V; default: 4÷20 mA).

for the output ±10 V and ±5 V the soldered jumper SW1 must be closed:

- open the instrument, releasing with a screwdriver the locking tabs that hold together the two sides of the case;
- locate on the printed circuit board the soldered jumper SW1 highlighted in the picture below:

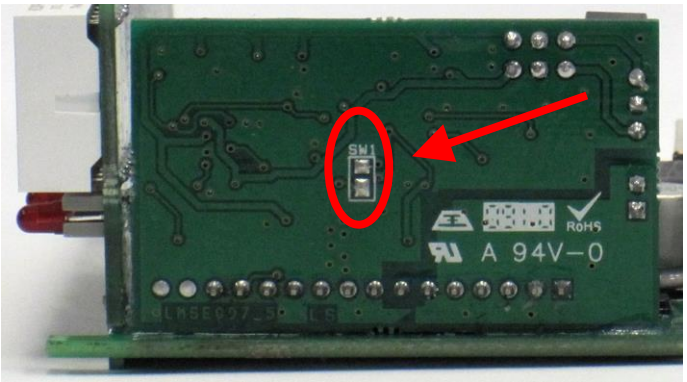

- close the jumper shorting the pads with a drop of tin.

- MOdE: choice of a weight followed by the analog output: gross (GrOSS) or net (nEt). If the net function is not active, the analog output varies according to gross weight.
- AnA 0: set the weight value for which you wish to obtain the minimum analog output value.

Only set a value different from zero if you wish to limit the analog output range; for instance: for a full scale value of 10000 kg you require an 4 mA signal at 5000 kg and 20 mA at 10000 kg, in this case, instead of zero, set 5000 kg.

- AnA FS: set the weight value for which you wish to obtain the maximum analog output value; it must correspond to the value set in the PLC program (default: calibration full scale). E.g.: if I am using a 4÷20 mA output and in the PLC program I wish to have 20 mA = 8000 kg, I will set the parameter to 8000.
- COr 0: analog output correction to zero: if necessary adjust the analog output, allowing the PLC to indicate 0. The sign "-" can be set for the last digit on the left. E.g.: if I use a 4÷20 mA output and, with the minimum analog setting, the PLC or tester read 4.1 mA, I must set the parameter to 3.9 to obtain 4.0 on the PLC or tester.
- COr FS: correction of analog output to full scale: if necessary permit modification of the analog output by allowing PLC to indicate the value set in the parameter AnA FS. E.g. if I am using a 4÷20 mA output with the analog set to full scale and the PLC or tester reads 19.9 mA, I must set the parameter to 20.1 to get 20.0 on the PLC or tester.

Minimum and maximum values which can be set for zero and full scale corrections:

ANALOG OUTPUT TYPE	Minimum	Maximum
0÷10 V	-0.150	10.200
0÷5 V	-0.150	5.500
±10 V	-10.300	10.200
±5 V	-5.500	5.500
0÷20 mA	-0.200	22.000
4÷20 mA	-0.200	22.000

NOTE: the analog output may also be used in the opposite manner, i.e. the weight setting that corresponds to the analog zero (AnA 0) may be greater than the weight set for the analog full scale (AnA FS). The analog output will increase towards full scale as the weight decreases; the analog output will decrease as the weight increases.

For example:
AnA 0 = 10000 AnA FS = 0 analog output 0÷10 V

Weight = 0 kg analog output = 10 V
Weight =5000 kg analog output = 5 V
Weight =10000 kg analog output = 0 V

All analog outputs of the instrument are ACTIVE and SINGLE ENDED type, therefore they can be connected only to PASSIVE receiver devices. The minimum load allowed for voltage outputs is 10 kohm, the maximum load allowed for current outputs is 300 ohm.

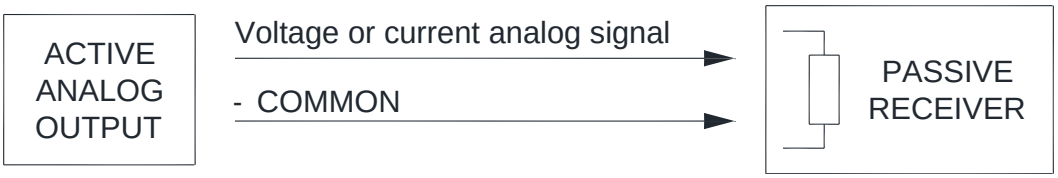

SERIAL COMMUNICATION SETTING

000000 MENU ENTER + ESC CALIb ▼ ▲ SERIAL

- rS485 / rS232: communication port.

  - nOnE: it disables any type of communication (default).
  - ModbUS: MODBUS-RTU protocol; possible addresses: from 1 to 99 (see Communication protocols manual).
  - rIP: continuous weight transmission protocol to RIP5/20/60, RIP50SHA, RIPLED series remote displays; the remote display shows the net weight or gross weight according to its settings (set: bAUd = 9600, PArITY = nOnE, StOP = 1).
  - HdrIP: continuous weight transmission protocol to RIP6100, RIP675, RIP6125C series remote displays; the remote display shows the net weight or gross weight according to its settings (set: bAUd = 9600, PArITY = nOnE, StOP = 1).
  - HdrIPn: continuous weight transmission protocol to RIP6100, RIP675, RIP6125C series remote displays (set: bAUd = 9600, PArITY = nOnE, StOP = 1).
    When the remote display is set to gross weight:
    - if the instrument displays the gross weight, the remote display shows the gross weight.
    - if the instrument shows the net weight, the remote display shows the net weight alternated with the message nEt.
  - PrInter: printer.
  - UEI MOd: weight reception mode (see section **WEIGHT READING VIA SERIAL PORT**).
  - UEI rIP: weight reception mode (see section **WEIGHT READING VIA SERIAL PORT**).

    - bAUd: transmission speed (2400, 4800, 9600, 19200, 38400, 115200; default: 9600).
    - Addr: instrument address (from 1 to 99; default: 1).
    - dELAY: delay in milliseconds which elapses before the instrument replies (from 0 to 200 ms; default: 0).
    - PArITY:
      - nOnE: no parity (default).
      - EUEn: even parity.
      - Odd: odd parity.
    - StOP: stop bit (1 – 2; default: 1).
    - EMPtY: number of blank lines between one printout and the next.
    - HEAdEr: printing of custom heading from PC (YES – nO; default: nO).
    - PrtMOd: connected printer type:
      - P 190
      - StAUP
      - StAUt

For more information about protocols and methods of communication, request the proper manual to technical assistance.

RS232 SERIAL COMMUNICATION

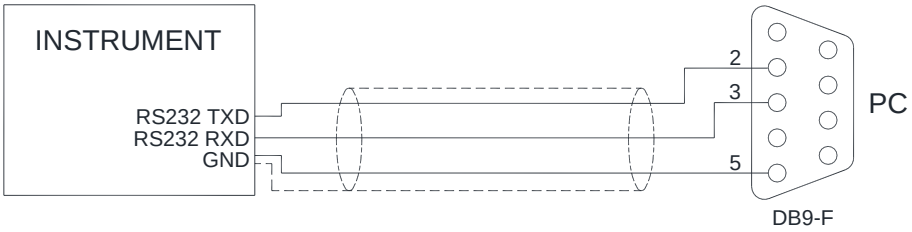

RS485 SERIAL COMMUNICATION

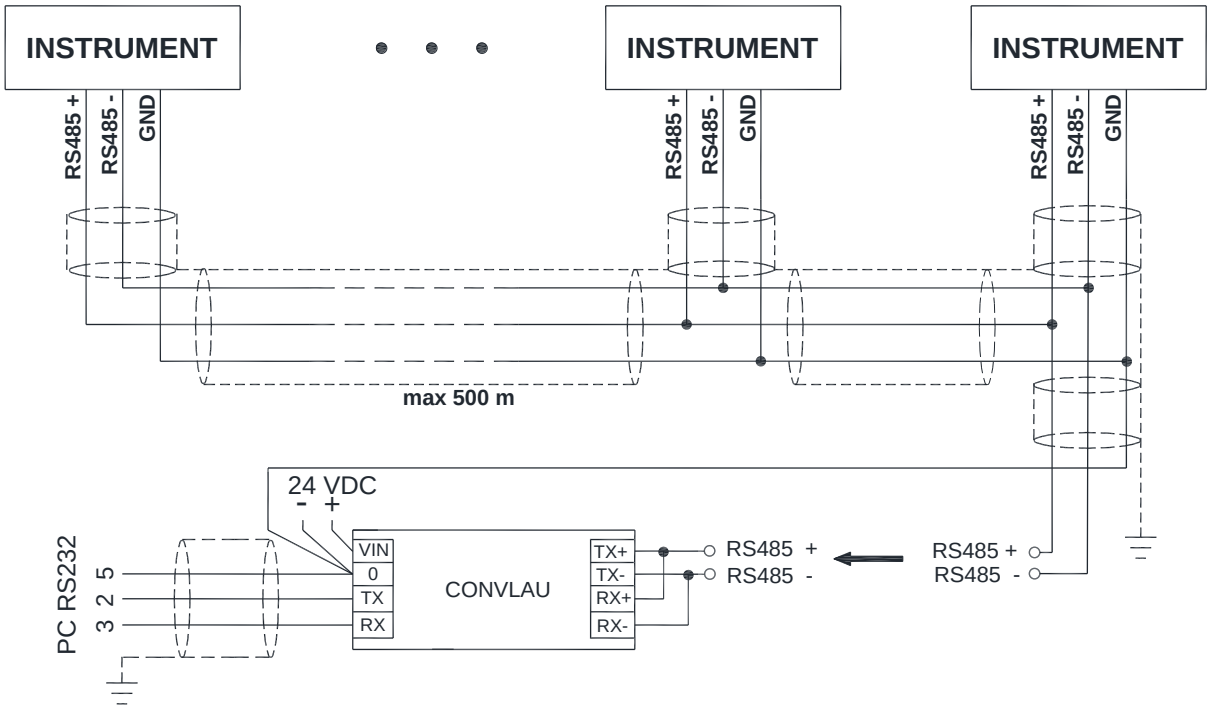

If the RS485 network exceeds 100 metres in length or baud-rate over 9600 are used, two terminating resistors are needed at the ends of the network. Two 120 ohm resistors must be connected between the "+" and "–" terminals of the line, on the terminal strip of the furthest instruments. Should there be different instruments or converters, refer to the specific manuals to determine whether it is necessary to connect the above-mentioned resistors.

DIRECT CONNECTION BETWEEN RS485 AND RS232 WITHOUT CONVERTER

Since a two-wire RS485 output may be used directly on the RS-232 input of a PC or remote display, it is possible to implement instrument connection to an RS-232 port in the following manner:

INSTRUMENT		RS232
RS485 **–**	→	RXD
RS485 **+**	→	GND

This type of connection allows A SINGLE instrument to be used in a ONE WAY mode.

WEIGHT READING VIA SERIAL PORT

Overview:
By transmitting instrument, it means the one connected to the load cell.
By receiving instrument, it means the one which receives the weight via serial port.

This function allows the instrument to read the weight by another instrument (transmitting instrument) rather than by a load cell, via the RS485 or RS232 serial port. Outputs, serial ports and analog output (if present) continue to work as described in this manual, using as weight value the one received via serial port.
The instrument supports the following modes of weight reading via serial port:
- UEI MOd (see section **WEIMOD MODE**)
- UEI rI P (see section **WEIRIP MODE**)

WARNING: in order to use the weight reading via serial port, the weight reading mode must be set as SErI AL (see section **DATA DELETION AND PROGRAM SELECTION**).

WEIMOD MODE

The instrument works as if it were directly connected to the load cell, therefore calibrations and zero settings can be done. The protocol used is Modbus (the receiving instrument works as master and the transmitting one as slave).
Procedure:

1. *TRANSMITTING INSTRUMENT* (see section **SERIAL COMMUNICATION SETTING** in the transmitting instrument manual)
   - select the desired serial port
   - set ModbUS protocol
   - set the serial communication parameters
   - set the desired filter value (see section **FILTER ON THE WEIGHT** in the transmitting instrument manual)

2. *RECEIVING INSTRUMENT* (see section **SERIAL COMMUNICATION SETTING**)
   - select the desired serial port
   - set the UEI MOd mode

     It's not possible to enable this function on several serial ports; in case of conflict, the last serial set remains active.

   - set the serial communication parameters as on the transmitting instrument:
     - bAUd: transmission speed (2400, 4800, 9600, 19200, 38400, 115200; default: 9600)
     - SLAUE: transmitting instrument address (from 1 to 99; default: 1)
     - dELAY: delay in milliseconds which elapses before the instrument replies (from 0 to 200 ms; default: 0)
     - PArI tY:
       - nOnE: no parity (default)

- EUEn: even parity
- Odd: odd parity
- StOP: stop bit (1 – 2; default: 1)

The transmitting instrument display is locked and shows the instrument model. To unlock it, disconnect the receiving instrument and follow the procedure in section **KEYPAD OR DISPLAY LOCKING** in the transmitting instrument manual.

WEIRIP MODE

The instrument receives the gross weight via serial port; calibrations and zero settings must be performed on the transmitting instrument.
Procedure:

1. *TRANSMITTING INSTRUMENT* (see section **SERIAL COMMUNICATION SETTING** in the transmitting instrument manual)
   - select the desired serial port
   - set rI P protocol
   - set the serial communication parameters

2. *RECEIVING INSTRUMENT* (see section **SERIAL COMMUNICATION SETTING**)
   - select the desired serial port
   - set the UEI rI P mode

It's not possible to enable this function on several serial ports; in case of conflict, the last serial set remains active.

   - set the serial communication parameters as on the transmitting instrument:
     - bAUd: transmission speed (2400, 4800, 9600, 19200, 38400, 115200; default: 9600)
     - dELAY: delay in milliseconds which elapses before the instrument replies (from 0 to 200 ms; default: 0)
     - PArI tY:
       - nOnE: no parity (default)
       - EUEn: even parity
       - Odd: odd parity
     - StOP: stop bit (1 – 2; default: 1)
   - set unit of measure (UnI t) and number of decimals (dECI M) of the gross weight received by the transmitting instrument

The UnI t and dECI M menu items appear in the main menu after having set the UEI rI P mode.

RS485 CONNECTION

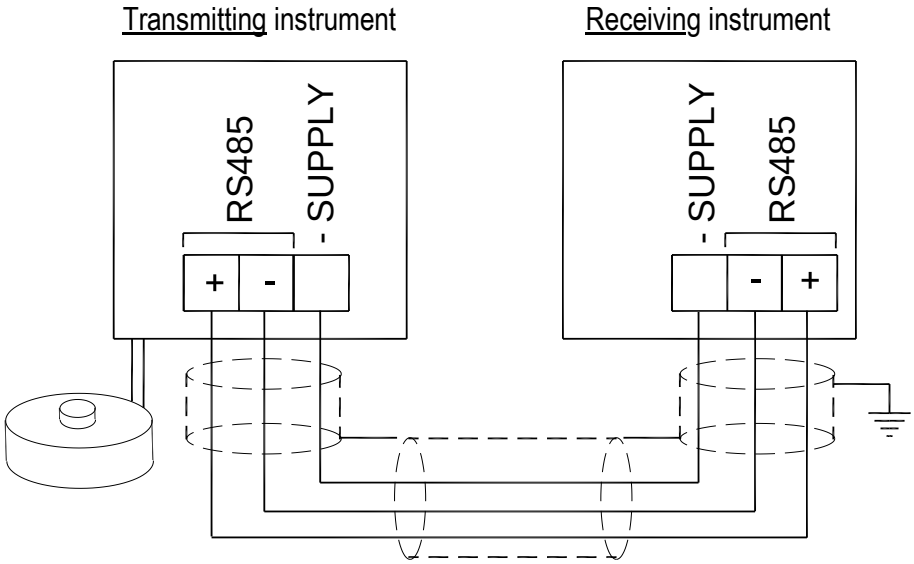

INSTRUMENT	Connector	Pin	Signal
WDOS	TERMINAL	17	RS485: -
		18	RS485: +
		2	RS485: SHIELD, GND

If the RS485 network exceeds 100 metres in length or baud-rate is higher than 9600, two terminating resistors are needed at the ends of the network. Two 120 ohm resistors are to be connected, between the "+" and "–" terminals of the line on terminal strip of the instrument furthest away in the network. If should be there different instruments or converters, refer to the specific manuals to determine whether it is necessary to connect the above-mentioned resistors.

RS232 CONNECTION

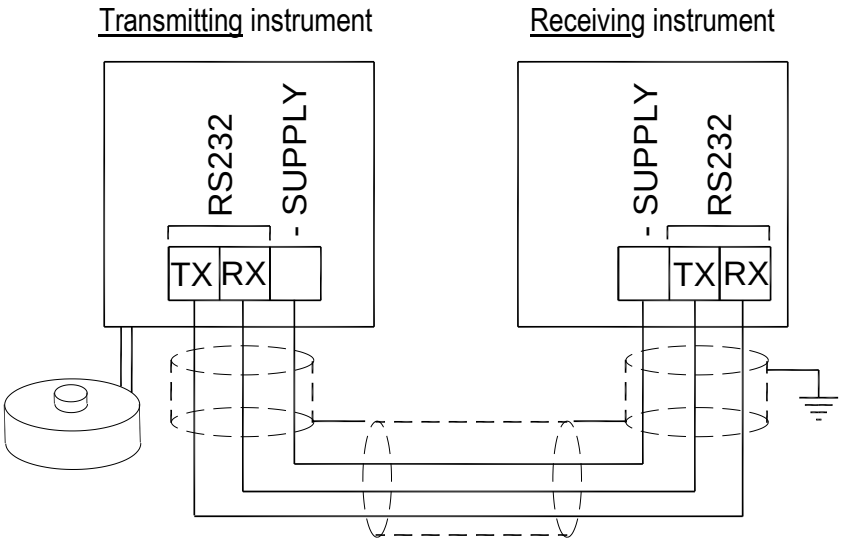

INSTRUMENT	Connector	Pin	Signal
WDOS	TERMINAL	3	RS232: TXD
		4	RS232: RXD
		2	RS232: SHIELD, GND

ALARM RELAY CLOSURE

000000 MENU ENTER + ESC CALIb ▼ ▲ ALArM

The ALARM relay closing can be enabled or disabled for each of the following alarms: approval contact (CONSP);formula not programmed (EMPTY); maximum weight exceeded (MASFOr); minimum weight (tArE); no increase in weight (LOAd); no decrease in weight (UnLOAd); fall (FALL); the PC did not read the batching data (SLAuE).

YES: in presence of alarm, the relay is closed (default)

nO: the relay is not closed even in the presence of alarm

TEST

000000 MENU ENTER + ESC CALIb ▼ ▲ tESt

- **Input Test:**
  In: ensure that for each open input 0 is displayed, 1 is displayed when the input is closed.
- **Output Test:**
  Out: setting 0 ensure that the corresponding output opens. Setting 1 ensure that the corresponding output closes.
- **E/EC Option Test:**
  EC: It shows the formula selected by the E/EC option, if the option is not present or is not active, the message EC-Er is displayed.
- **Analog Output Option Test:**
  AnALOG: It allows the analog signal to range between the minimum and the maximum values starting from the minimum.
  MA: current output test.
  uOLt: voltage output test.
- **Millivolt Test:**
  MU-CEL: displays the load cell response signal in mV with four decimals.

DATE AND TIME SETTING

000000 MENU ENTER + ESC CALIb ▼ ▲ dAtE

Selecting the dAtE item in the main menu, access is obtained to the date and time display menu. Pressing ENTER several times scrolls through days - months – years and hours – minutes; pressing ◀ and ▶ keys selects the figure to modify; with ▲ and ▼ keys you can modify it; with ENTER key you can confirm and go to the next menu item.

OPERATION SETTINGS

000000 MENU/ENTER + →0← ESC CALIb ▼ ▲ SEttIn

nEXt P: Select the switch conditions from the SET opening to the CYCLE END closing.

- tIME (default: YES): time set in constants (tIMEAt).
- COMAnd (default: nO): START input closure or ENTER key pressure.
- StAbLE (default: nO): stable weight.

PSS (default: 2): Select the operating mode of SET and PRESET contacts.

- PSS = 1: at the batching start, only the PRESET contact is closed; once reached the preset set value, the related contact is opened and the SET contact is closed; reached the final value of set, the related contact is opened.
- PSS = 2: at the batching start, the SET and PRESET contacts are closed simultaneously; once reached the preset value, the related contact is opened (beginning of the slow phase); once reached the set value, also the related contact is opened. For single-speed batching, program PSS = 2 and use only the SET contact.
- PSS = 3: at the batching start, only the PRESET contact is closed; once reached the preset value, also the SET contact is closed; once reached the final value of set, both are reopened.

EndnEt (default: nO): Select the display type of net / gross weight during the CYCLE END phase (unloading of the scale at the end of batching).

- YES: during the cycle end, the net weight is displayed. After the CYCLE END opening, the gross weight is displayed.
- nO: during the cycle end, the gross weight is displayed.

bLACH (default: MAn): Select the batching resume mode after a power failure.

- AUt: (automatic) at the power restore, bLACH appears for 3 seconds, after which the batching resumes from the point of interruption.
- MAn: (manual) at the power restore bLACH appears, press ENTER to resume the batching or press ESC to stop it.

INFO MENU

000000 MENU/ENTER + →0← ESC CALIb ▼ ▲ InFO

GEnrIC: the identification data of the instrument are displayed.

- InStrM: instrument model
- SU COd : software code
- PrOGrM: program type
- FU UEr: software version
- SEr nu: serial number

OP2: active options are displayed.

PROGRAMMING OF BATCHING CONSTANTS

From weight display press MENU, then press ▲ several times until CONSt is displayed and confirm.

MENU/ENTER: to enter a menu or confirm the data entry.
▲ ▼: to modify the displayed value or menu item.
◀ ▶: to select a new figure.
ESC: to cancel and return to the previous menu.

MINIMUM WEIGHT

MIn (from 0 to full scale; default: 10): minimum weight, value at which the scale is considered empty. Batching start is only allowed if the weight is lower than this value, during the unloading phase the CYCLE END contact will be opened when the weight reaches this value and after the safe emptying time is over.

MAXIMUM WEIGHT

MASS (from 0 to full scale; default: 0): settable and displayable maximum weight. If the displayed weight exceeds the maximum weight by 9 divisions, the ------ message is displayed; if in the formulas programming the weight value set is greater than this value, the Error message is displayed and the value will not be stored.
By setting 0, the function is disabled.

SAFE EMPTYING TIME

tSIC (from 0.0 to 999.9 seconds; default 5.0): time that is necessary for a perfect emptying of the scale. The instrument waits for this time during the unloading phase (CYCLE END closed), after reaching the minimum weight and before opening the CYCLE END contact to obtain a perfect emptying of the scale.

WAITING TIME

tI MEAt (from 0.0 to 999.9 seconds; default 5.0): time elapsing between the SET end batching and the CYCLE END closing to allow the weight to get steady. This waiting time is only required if the automatic fall is programmed and/or consumption (or production, or stocks) is enabled and/or printing is enabled and/or a tolerance value has been programmed and/or confirmation from PC is enabled and/or USB option is present and/or DATIPC option is present.

NO COMPARISON TIME

tnCOMP (from 0.0 to 999.9 seconds; default: 0.0): this is the instrument waiting time during batching, after the opening of PRESET, before comparing the weight with the programmed SET value.

NO PRODUCT LOAD TIME

tnLOAd (from 0.0 to 999.9 seconds; default: 0.0): this parameter allows the product control during batching. if there is no product load, the instrument waits for a set duration of time before activating the alarm LOAd.

NO PRODUCT UNLOAD TIME

tnUnLO (from 0.0 to 999.9 seconds; default: 0.0): this parameter allows the product control during the unloading phase (cycle end). If there is no product extraction, the instrument waits for a set duration of time before activating the alarm UnLOAd.
WARNING: The control is only actuated after unloading of the product has started (the weight must decrease by at least 10 divisions).

FALL

By FALL it means the correction of the product amount in fall after the batching STOP. This amount is in addition to the product already batched causing inaccuracy. The instrument is able to anticipate the batching STOP, to reduce this uncertainty, with two possible ways:

- AUTOMATIC fall: the instrument automatically calculates the fall;
- MANUAL fall: the instrument applies the fall set by the operator;

WARNING: Setting a value of **WAITING TIME** (tI NEAt) such that the weight is stable at the end of the batching, otherwise the update of the AUTOMATIC fall is not correct.

NOdFAL

NOdFAL (from 1 to 99; default: 0): it's possible to select the automatic or the manual fall.

- NOdFAL = 0: MANUAL fall;
- NOdFAL different from 0: AUTOMATIC fall (the set value shows how many batchings the fall value is updated).

Note: In the batching cycles in which the fall value is not updated, the **WAITING TIME** is not applied, unless there are no other functions that require the **WAITING TIME** (eg prints...). So, by setting a high value, it reduces the duration of batchings.
Example: If NOdFAL = 3 the AUTOMATIC fall is calculated every three batching cycles.

FALdI u (only if MOdFAL ≠ 0)

FALdI u (from 0 to full scale; default: 0): this parameter indicates the limit within which the automatic fall is updated according to the parameter MOdFAL .By setting a low value is obtained more accurately but the length of the batchings could increase, because, if necessary, the AUTOMATIC fall is updated every cycle regardless of MOdFAL . By setting 0, the function is disabled.

Example: By setting MOdFAL = 3, FALdI u = 5 and the weight equal to 100, the instrument updates the fall every batching, until the batched weight falls within the 95 to 105 range, and then it goes back to update the AUTOMATIC fall every 3 batchings.

FALL

FALL (from 0 to maximum weight; default: 0): in this parameter it is possible to set the fall value for each formula (only if MOdFAL = 0) or to display and/or to modify the fall value calculated automatically by the instrument (only if MOdFAL is different from 0).

TOLERANCE

tOL (from 0 to maximum weight; default: 0): Adjustable parameter for each formula that defines how much the batched weight value can deviate from the one set in formula. If the batched weight is higher or lower than the amount to be batched, for a value greater than the tolerance, the instrument closes the TOLERANCE contact. Press ENTER to continue the batching; the TOLERANCE contact remains closed until the weight reaches the minimum weight value and the safe emptying time has elapsed. Example: if a SET = 1000 value is set and a TOLERANCE = 100 value is set, the batched weight must not be lower than 900 or higher than 1100 to allow the instrument to continue the batching process. By setting 0, the function is disabled.

SLOW

SLOU (from 0 to maximum weight; default: 0): single valid value for all the formulas in place of the preset value. When the weight has reached the SET value minus the value set in this parameter, the slow batching phase starts by the PRESET contact. If the set value is greater than the weight to batch, the batching will be in slow phase. By setting 0, the function is disabled.
Example: If SET = 100 and SLOW = 15, the slow phase begins when the weight reaches 85.

TAPPING FUNCTION

In the event that the batching instrument is not equipped with the speed “slow” it is possible to use this function to slow down the product batching in the final phase (through opening and closing cycles of the SET contact) and to increase the accuracy. Set in SLOU parameter the product amount you want to batch with the tapping function enabled.

SLOW ON

SLOUOn (from 0 to 9.9; default: 0): time in which the SET relay remains closed during the SLOW phase. By setting 0, the function is disabled.

SLOW OFF

SLOUOF (from 0 to 9.9; default: 0): time in which the SET relay remains open during the SLOW phase. By setting 0, the function is disabled.

AUTOTARE

AtArE (from 0 to 999; default: 0): autotare enabling (automatic tare at batching start); the autotare will be updated every as many cycles of a single batching sequence as are set in this parameter. By setting 0, the function is disabled.
This operation is possible only if the gross weight is lower than the minimum weight (Mi n), otherwise the tArEP alarm message is displayed.

AUTOTARE DELAY

ti MEtA (**only if AtArE ≠ 0**; from 0 to 99.9; default: 0): the instrument waits for this time, after the starting of the formula, before performing the autotare and starting the batching.

STABLE TARE

StAbtA (**only if AtArE ≠ 0**; default: nO): autotare enabled at stable weight.

- YES: if autotare enabled, zero-setting at batching start is done after a possible delay time and only when the weight is stable.
- nO: if autotare enabled, zero-setting is done right after the delay time.

PRINT AT CYCLE END

Pri nt (default nO): function enabling to print batching data at cycle end.

- YES: print enabled
- nO: print disabled

NUMBER OF BATCHING PRINTOUTS

nCOPY (from 1 to 9; default: 1): number of copies of the batching printout.

CHECKING PC PRESENCE

PC (default: nO): check for a PC connected to the instrument.

- YES: PC presence check active; the instrument checks for a PC every 10 seconds. If no PC presence is detected, the instrument will display an alarm signal PC alternated with the weight value.
- nO: PC presence check not active.

WARNING: The check is active only if selected the Modbus protocol.

WAITING CONFIRMATION FROM PC (SLAVE)

SLAuE (default: nO): waiting for confirmation of record batching data from PC.

- YES: check enabled; the instrument waits for the PC to read the batching data, before starting another batching. In case of recording failure, the instrument displays an alarm SLAuE.
- nO: check disabled; at cycle end, the instrument will not wait for data recording on PC before performing another batching.

SWITCHING OF THE ALARM RELAY ON WEIGHT

rALArn (from 0 to full scale; default: 0): by setting a value different from zero, the ALARM contact does not switch over in case of alarm, but behaves as a SETPOINT contact; the relay closes when the weight reaches the value set in this parameter.

SWITCHING OF THE TOLERANCE RELAY ON WEIGHT

rtOLEr (from 0 to full scale; default: 0): by setting a value different from zero, the TOLERANCE contact does not switch on the basis of tolerance, but behaves as a SETPOINT contact; the relay closes when the weight reaches the value set in this parameter.

FORMULAS PROGRAMMING

Select the formula that you wish to program and set PrESEt and SEt.
It is possible to set max 99 formulas.

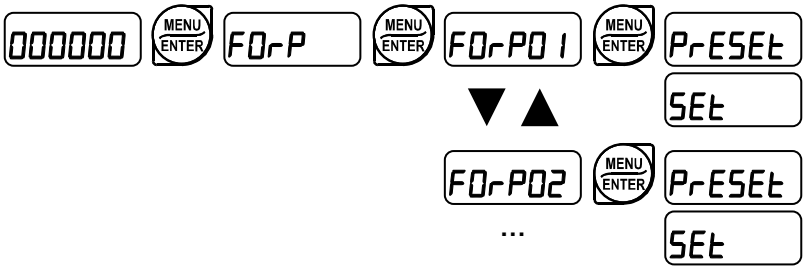

PrESEt is NOT displayed if a SLOW value has been set in the constants (SLOU).

In case of attempt in PrESEt or SEt to set a value higher than the maximum weight (MASS) set in the batching constants, the message ErrOr is displayed.

During formulas programming the LCD display shows the table of programmed values:

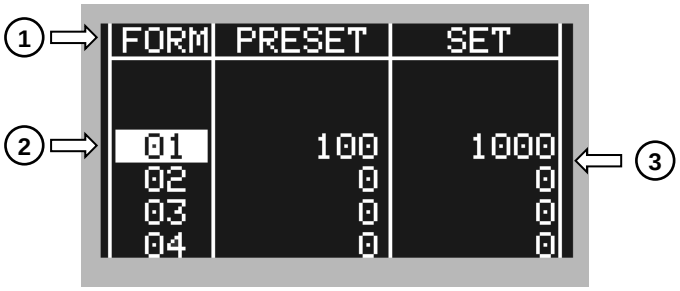

1) Columns heading;
2) Selected formula;
3) Weight values;

If a SLOW value has been set in batching constants, the PRESET column is replaced by the one of SLOW values.

DELETING FORMULAS

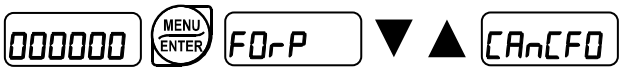

Confirm with ENTER the CAnCFO prompt, to delete one formula enter the formula number, to delete all formulas enter 00 (FOrP00), confirm with ENTER, you will be prompted to confirm (SUrE), to delete confirm again with ENTER otherwise press ESC to cancel the command.

Note: In case of alarm, the batching may be canceled by pressing the ESC button or by closing the STOP input.

000000 START FOr 01 MENU ENTER C 0001

After having selected the formula and set the desired number of batching cycles, the first batching cycle starts as follows:

1. The instrument will ensure that:
   - the formula has been programmed, otherwise it will display the alarm EMPtY.
   - the amount set in the formula does not exceed the set maximum weight (MASS), otherwise the message MASFOr is displayed.
   - IN3 input (if it is set as Approval) is closed, otherwise the message CONSP will be displayed; close the IN3 input to start the batching.
   - the gross weight is lower than the minimum weight (Mi n), otherwise the alarm tArE P is displayed (however it is possible to force batching start by pressing ENTER).
   - Only if consumptions are enabled:
     - If the consumed amount exceeds the value 999000, the tOtAL message appears for a second.
     - If the consumed amount exceeds the value 999999, the amount is automatically set to zero.
   - Only if production is enabled:
     - If the batched amount exceeds the value 9990000, the PrOdUC message appears for a second.
     - If the batched amount exceeds the value 9999999, the amount is automatically set to zero.
2. Once the above listed conditions are met, the batching is started and the SET and PRESET contacts switch depending on the PSS parameter (see section **OPERATION SETTINGS**). From now on, we assume the parameter PSS = 2 (default); so that, SET and PRESET are closed.
3. If during the batching, after setting the time tnLOAd, the product is not loaded by at least 20 divisions within this interval of time, the LOAdP alarm message will be displayed.
4. The PRESET contact will be opened, as soon as one of the following conditions is reached:
   - Only if SLOU is set**:** once reached the set value minus the slow value;
   - Once reached the preset value set in formula;
5. If a tapping value has been set, the SET contact will be opened and closed according to the SLOUOn and SLOUOF times;
6. Only if tnCOMP is set**:** the instrument does not verify the reaching of Set value until the **COMPARISON TIME** has elapsed.
7. As soon as the SET value in the formula minus the possible fall value is reached, the SET contact will be opened and the product flow will be interrupted;
8. After the opening of the SET contact, the system shows the weight preceded by the letter A and waits:
   - Only if tI ME = YES: the waiting time has elapsed (tI MEAt).
   - Only if COMAnd = YES: the START input has been closed or the ENTER key has been pressed.
   - Only if StAbLE = YES: the weight is stable.
9. If the tolerance (tOL) is set and the batched quantity is lower than the set quantity minus this value, is made only one attempt of finishing re-start, in order to improve the batching precision. In such a

case, the SET contact is closed and returns to step 7, otherwise the tOL alarm appears. If instead, the batched quantity is greater than the set amount plus this value, the tOL alarm appears. Press ENTER to cancel the alarm and go on with the batching.

10. The system enters the cycle end phase:
    - The CYCLE END contact is closed;
    - The display shows the weight preceded by the letter E;
    - Only if PrInt = YES: batching data (with date and time) are printed.
    - Consumption/production/stocks are stored (if enabled).
11. At the beginning of the product extraction, if the tnUnLO time is set and the product is not extracted by at least 20 divisions within this interval of time, the UnLOAd alarm message will be displayed.
12. The system ends the batching (opening of the CYCLE END contact) only after verifying that:
    - The weight is lower than the minimum weight (MIn);
    - The safe emptying time has elapsed (tSIC);
13. Only if SLAuE = YES: the instrument waits for data recording on PC, before being available for a new batching.

If several batching cycles have been set the instrument starts a new cycle.

BATCHING START FROM EXTERNAL CONTACT

It is possible to select the required formula via an external selector switch. After selecting the formula, close the START external contact for at least 0.5 seconds and, verified the conditions indicated in section **BATCHING**, the instrument will perform the selected formula batching.
If there is no the formula selection switch (E/EC options), the latest formula entered via the keypad will be batched, or it's possible to set the required formula in the following menu: press the MENU key for 3 seconds, FESt00 will be displayed, set the required formula number using the arrow keys and confirm with ENTER. At batching start, the set formula will be performed. If 00 is set, the latest formula set via keypad will be recalled.

If at the end of the batching, the START contact is closed, the same batching sequence is repeated.

DISPLAYING DURING BATCHING

During the batching cycle the LCD display shows the following screen:

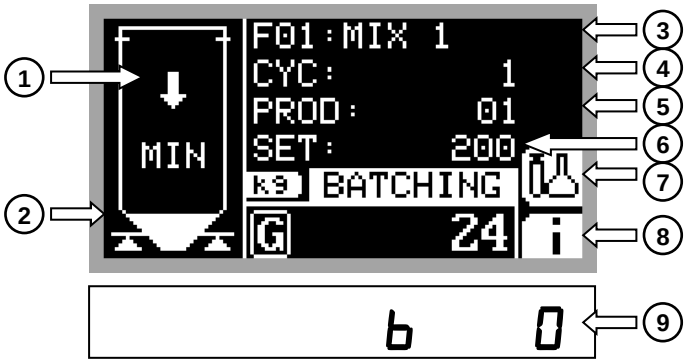

1) Product loading;
2) Product level on the scale;
3) Formula number and name;
4) Running cycle number;
5) Product number or name;
6) Set value;
7) Product detail display;
8) System information display;
9) Batching weight value

Product loading: the arrow indicates that product is loading.

Batching weight value: net or gross weight is displayed (refer to **NET** LED).

PRODUCT DETAIL DISPLAY

Hold down the function key to show batching product details:

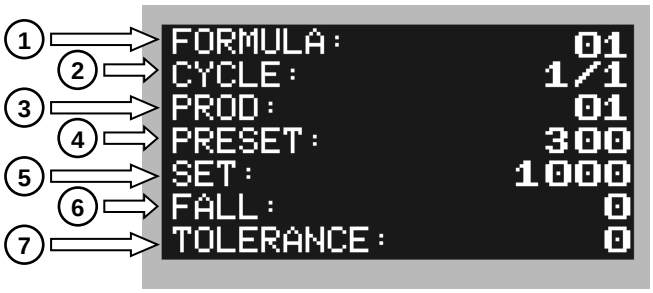

1) Formula number;
2) Running cycle number;
3) Product number;
4) Preset value;
5) Set value;
6) Fall value;
7) Tolerance value;

BATCHING STOP

- Open the START contact and close the STOP contact to stop the batching. If the START contact is closed, the StArtP alarm is displayed.
- To pause the batching at any time, press STOP, the PAUSE prompt is displayed. Press ENTER to resume the batching or press again STOP to cancel it definitely.

RESUME BATCHING AFTER A POWER CUT

If a blackout occurs during the batching (unloading phase included), when power comes back bLACH appears: press ENTER to resume batching from the point of interruption, press ESC to cancel the batching and return to the weight displaying.

If in constants bLACH = AUt, when power comes back bLACH appears and after 3 seconds the batching is automatically resumed.
Power failures do not cause any deletion of cycles still to be performed.

TOTALS MANAGEMENT

CONSUMPTION

This feature allows to store consumption of each product since the last deletion.

To enable consumptions management:

> CONSUMPTION:

- ENABLE (select YES to enable, NO to disable)

To access consumptions data press Tot function key:

Tot > CONSUMPTION:

- DISPLAY (consumptions display)
- DELETE (consumptions deletion)
- PRINT (consumptions print)

Selecting Tot > CONSUMPTION > DISPLAY the LCD display shows the following screen:

1) Heading;
2) Date and time of last deletion;
3) Products list;
4) Selected product;
5) Consumption;

Press ▲ ▼ keys to scroll products list and related consumptions or directly select the product to be displayed: press ENTER, set product number (field 4) and confirm.

PRODUCTION

This feature allows to store the quantity of batched product and the number of executed cycles for each formula since the last deletion.

To enable production management:

> PRODUCTION:

- ENABLE (select YES to enable, NO to disable)

To access production data press Tot function key:

Tot > PRODUCTION:

- DISPLAY (production display)
- DELETE (production deletion)
- PRINT (production print)

Selecting Tot > PRODUCTION > DISPLAY the LCD display shows the following screen:

1) Heading;
2) Date and time of last deletion;
3) Formulas list;
4) Selected formula;
5) Batched quantity and number of executed cycles;

Press ▲ ▼ keys to scroll formulas list and related production data or directly select the formula to be displayed: press ENTER, set formula number (field 4) and confirm.

STOCKS

This feature allows to manage the stocks for each product.
If STOCKS value falls below MINIMUM STOCK value, the StOCHn alarm is displayed.
If at batching start the product quantity to be batched (quantity set in formula multiplied by number of cycles to be run) is higher than STOCKS value, the StOCH alarm is displayed.

To enable stocks management:

> STOCKS:

- ENABLE (select YES to enable, NO to disable)

To access stocks data press Tot function key:

Tot > STOCKS:

- DISPLAY (stocks display and modification)
- DELETE (stocks deletion)
- PRINT (stocks print)

Tot > MINIMUM STOCK

- DISPLAY (minimum stocks display and modification)
- DELETE (minimum stocks deletion)
- PRINT (minimum stocks print)
-

Selecting Tot > STOCKS > DISPLAY the LCD display shows the following screen:

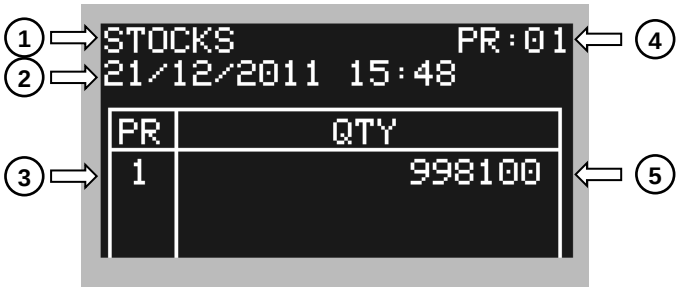

1) Heading;
2) Current date and time;
3) Products list;
4) Selected product;
5) Available quantity;

Press ▲ ▼ keys to scroll products list and related available quantities; to edit a product stock press ENTER, set product number (field 4) and confirm; the LCD display shows the following screen:

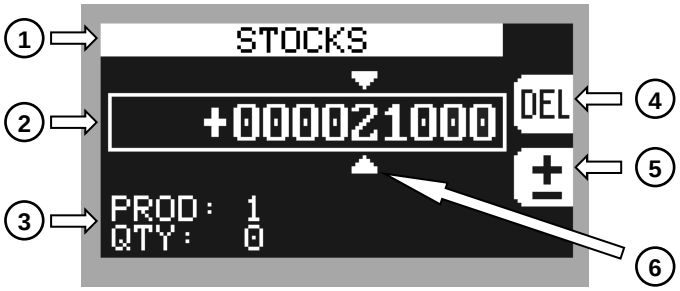

1) Heading;
2) Value;
3) Additional information;
4) Value deletion;
5) Value sign change;
6) Selected figure;

Additional information:

- PROD: product number;
- QTY: quantity currently stored to be modified;

Set the value to add to or subtract from the stock currently stored using ▲, ▼, ◀ and ▶ keys; press ENTER to confirm.

To view and edit the minimum stocks, select Tot > MINIMUM STOCK > DISPLAY and proceed as for stocks.

ALARMS

tArEP: it is displayed if, at batching start, the weight on the scale is higher than the minimum set in constants (Ml n). Press ESC to return to the weight displaying, press ENTER to cancel the alarm and continue with the batching. If the weight comes back below to the minimum set, the batching starts.

CONSP: it is displayed when at the batching start the APPROVAL input is open (if the input 3 is set as approval; In 3 = CONS). Close the input to enable batching or cancel it by pressing ESC.

tOL: it is displayed if at batching end the weight is different from the value set in formula by a value higher than tolerance. Press ENTER to cancel the alarm and continue with the batching.

FALL: it is displayed if at batching start the fall value is higher than the product quantity to be batched. Press ESC to cancel the alarm and the batching.

EMPtY: it is displayed if, at batching start, the formula recalled for running is not programmed. Press the key ESC to quit.

MASFOr: it is displayed if, at batching start, the formula recalled for running exceeds the maximum weight. Press the key ESC to quit.

PAUSE: it means that during batching the STOP key has been pressed, temporarily interrupting the cycle; press the ENTER key to start it again, or STOP to terminate completely the batching.

bLACH: it indicates that a power failure occurred during batching: press ESC to cancel the batching or press ENTER to resume batching again from the point of interruption.

LOAd: during the batching it indicates that the product is not loaded. It is automatically cancelled if the product increases. Press STOP twice to cancel the batching.

UnLOAd: during the unload (Cycle End contact closed) it indicates that the product is not extracted. It is automatically cancelled if the product decreases. Press STOP twice to cancel the unload.

StArtP: it is displayed for 3 seconds if you try to stop the batching (by pressing twice STOP or closing the related input) when the START input is closed. Open the START input to cancel the alarm.

PArSEr: batching is cancelled. Press ESC to quit. If the alarm persists, contact technical assistance.

ErUEI G: it is displayed when there is a weight alarm and it cancels the current batching. Press ESC to go back to the weight display and check the alarm.

ErCEL: the load cell is not connected or is incorrectly connected; the load cell signal exceeds 39 mV; the conversion electronics (AD converter) is malfunctioning; the load cell is a 4−wire and there are no jumpers between EX- and REF- and between EX+ and REF+.

nO COM: communication problems between transmitter and receiver; check electrical connections and instruments configuration.

Er OL: the weight display exceeds 110% of the full scale.

EErOL: weight display on transmitting instrument exceeds 110% of full scale.

Er Ad: internal instrument converter failure; check load cell connections, if necessary contact technical assistance.

------: the weight exceeds the maximum weight by 9 divisions.

Er OF: maximum displayable value exceeded (value higher than 999999 or lower than -999999).

EErOF: maximum displayable value exceeded on transmitting instrument (value higher than 999999 or lower than -999999).

t------: weight too high: zero setting not possible.

MAH-PU: this message appears in the sample weight setting, in real calibration, after the eighth sample weight value has been entered.

Error: the value set for the parameter is beyond the permitted values; press ESC to quit the setting mode leaving the previous value unchanged. Examples: a number of decimals is selected for full scale which exceeds the instrument's display potential; value above the maximum setting value; the weight value set in sample weight verification does not match the detected mV increase; the analog output correction goes beyond the permitted limits.

bLOC: lock active on menu item, keypad or display.

nOdI SP: It's not possible to display properly the number because is greater than 999999 or less than -999999.

bAtrtC: buffer battery low, loss of date and time of Real-Time Clock. Confirm with ENTER to continue; leave the instrument on for at least 12 hours to charge the battery, if the alarm persists contact technical assistance.

dAtEP: an incorrect date has been detected: go into the related menu to check and correct it.

COMAnd: waiting for START closure or ENTER key pressure to continue the batching.

PC: PC is not connected.

SLAuE: PC has not read batching data.

StOCH: product quantity to be batched (quantity set in formula multiplied by number of cycles to be run) is higher than stocks value. Press ENTER to cancel the alarm and continue with the batching, press ESC to stop it.

StOCHM: stocks value is lower than minimum stocks value. Press ENTER to cancel the alarm and continue with the batching, press ESC to stop it.

I n2ErO: gross weight equal to zero: the semi-automatic tare operation cannot be performed.

Serial protocol alarms:

	ErCEL	Er OL	Er Ad	------	Er OF	t-----
MODE						
Bit LSB	76543210	76543210	76543210	76543210	76543210	The instrument's response to the zero command is a 'value not valid' error (error code 3)
Status Register MODBUS RTU	**xxxxxxx1**	**xxxx1xxx**	**xxxxxx1x**	**xxxxx1xx**	On gross: **xxx1xxxx** On net: **xx1xxxxx**	
RIP *	**__O-F_**	**__O-L_**	**__O-F_**	**__O-L_**	**__O-F_**	**__O-F_**
HDRIP-N	**_ERCEL**	**_ER_OL**	**_ER_AD**	**######**	**_ER_OF**	**O__SET**

*** For RIP remote displays, if the message exceeds 5 digits the display reads ------.**

With an alarm the relays open and the analog outputs go to the lowest possible value according to the following table:

RANGE	0÷20 mA	4÷20 mA	0÷5 V	0÷10 V	±10 V	±5 V
Output value	-0.2 mA	3.5 mA	-0.5 V	-0.5 V	0 V	0 V

PRINTING EXAMPLES

If the printer has been set (see section **SERIAL COMMUNICATION SETTING**), from the weight display press the PRINT key:

- UEI GHt: prints the displayed weight;
- CONSt: prints the constants (minimum weight, maximum weight, etc.);
- FOrP: prints one or all of the formulas; press ENTER to display FOrPO 1, set the formula number to be printed or "00" to print them all;

To print consumption, production and stocks data: press Tot, enter the desired menu and select PRINT (see section **TOTALS MANAGEMENT**).

BATCHING PRINTOUT

Batching without tare with formula name set (AtArE = 0)

```
:::::::::::::::::::::::
WDOS   LOAD     Addr:01
FORMULA: 01  (MIX 01  )
CYCLE:       1/       1
DATE: 01/10/11 08:30:01

INIT.WEIGHT       10 kg
GROSS   1005:   1000 kg
```

Batching without tare (AtArE = 0):

```
:::::::::::::::::::::::
WDOS   LOAD     Addr:01
FORMULA:             01
CYCLE:       1/       1
DATE: 01/10/11 08:30:01

INIT.WEIGHT       10 kg
GROSS   1005:   1000 kg
```

Batching with tare each cycle (AtArE = 1)

```
:::::::::::::::::::::::
WDOS   LOAD     Addr:01
FORMULA:             01
CYCLE:       1/       1
DATE: 01/10/11 08:30:01

TARE              34 kg
NET     1005:   1000 kg
```

Batching with reset every X cycles (AtArE = X)

```
:::::::::::::::::::::::
WDOS   LOAD     Addr:01
FORMULA:             01
CYCLE:       2/       2
DATE: 01/10/11 08:30:01
```

```
INIT.WEIGHT        1 kg
GROSS   1070:   1000 kg
:::::::::::::::::::::::
WODS   LOAD     Addr:01
FORMULA:             01
CYCLE:       1/       2
DATE: 01/10/11 08:30:01

ZERO WEIGHT       12 kg
GROSS   1026:   1000 kg
```

CONSTANTS PRINTOUT

```
:::::::::::::::::::::::
WDOS   LOAD     Addr:01
DATE: 01/10/11 08:30:01
       CONSTANTS
MIN                  10
MASS                  0
TIME SIC            5.0
TIME WAIT           5.0
TIME NCOMP          0.0
TIME NLOAD          0.0
TIME NUNLOAD        0.0
FALL             MANUAL
SLOW                  0
TIME SLOWON         0.0
TIME SLOWOF         0.0
PSS                   2
AUTOTARE             NO
UNLOAD            GROSS
PRINT                NO
PC                   NO
SLAVE                NO
BLACKOUT         MANUAL
RELAY ALARM           0
RELAY TOL.            0

FOR.      FALL    TOLER
05           0      100
48         178        0
```

FORMULA PRINTOUT

Standard formula printout with formula name set (SLOU = 0)

```
:::::::::::::::::::::::
WDOS   LOAD     Addr:01
DATE: 01/10/11 08:30:01

FORMULA: 02  (MIX 02  )
SET             2000 kg
PSET             200 kg
```

Formula with slow active printout (SLOU = 100)

```
:::::::::::::::::::::::
WDOS   LOAD     Addr:01
DATE: 01/10/11 08:30:01

FORMULA:             02
SET             2000 kg
SLOW             100 kg
```

TOTALS PRINTOUT

Minimum stocks values print

```
:::::::::::::::::::::::
WDOS   LOAD     Addr:01
DATE: 01/10/11 08:30:01
   MINIMUM STOCK
P01              100 kg
```

Stocks values print

```
:::::::::::::::::::::::
WDOS   LOAD     Addr:01
DATE: 01/10/11 08:30:01
         STOCK
P01             8670 kg
```

Production values print

```
:::::::::::::::::::::::
WDOS   LOAD     Addr:01
DATE: 01/10/11 08:30:01
      PRODUCTION
FOR   CYCLE    QUANTITY
01        2      784 kg
FROM: 30/09/11 14:14:42
```

Consumptions values print

```
:::::::::::::::::::::::
WDOS   LOAD     Addr:01
DATE: 21/12/11 14:18:25
      CONSUMPTION
TOTAL            784 kg
FROM: 30/09/11 14:14:42
```

If consumptions are reset to zero, it will also be printed:

```
CONSUMPTION ERASED
```

WEIGHT PRINTOUT

```
:::::::::::::::::::::::
WDOS   LOAD     Addr:01
DATE: 12/09/11 14:48:12

GROSS           1204 kg
NET              831 kg
TARE             373 kg
```

RESERVED FOR THE INSTALLER

MENU LOCKING

Through this procedure, it's possible to block the access to any menu on the instrument.
Select the menu that you wish to lock:

000000 MENU/ENTER CALIb press ESC and ◀ simultaneously for 3 seconds, the display shows C.ALIb (the left point on the text indicates that this menu item is now locked). If the operator tries to enter this menu, the access is denied and the display shows bLOC.

MENU UNLOCKING

000000 MENU/ENTER C.ALIb press ENTER and ▲ simultaneously for 3 seconds, the unlock password is requested (if enabled) and the display shows CALIb (the left point on the text is off to indicate that this menu item is unlocked).

TEMPORARY MENU UNLOCKING

000000 MENU/ENTER C.ALIb press ▲ and ◀ simultaneously for 3 seconds, the unlock password is requested (if enabled): it is now possible to enter and modify all menus including those which are locked. By returning to weight display, the menu lock is restored.

SETTING UNLOCK PASSWORD

000000 MENU/ENTER + →0← ESC CALIb ▼ ▲ PSUbLC

The password must contain 6 characters; in order to change a customized password, the current password is required.
By setting 000000 (default) the unlock password is disabled.

DATA DELETION AND PROGRAM SELECTION

WARNING: operations must only be performed after contacting technical assistance.
After each operation the display shows dOnE, press ENTER to continue.
By pressing ESC the procedure is cancelled and no changes are made.

Upon instrument power-on hold down the ESC key until the display shows PrOC, then proceed as follows:

CONSTANTS RESTORE (does not erase the calibration): confirm PrOC, use arrow keys to select PASSU, set code 6935 and confirm.

PROGRAM SELECTION: confirm PrOG and use the arrow keys to select the desired program:
bASE: basic program, setpoint management only.
rI P: weight remote display program with setpoint.
tOtAL: TOTALS program.
LOAd: monoproduct loading program.
UnLOAd: monoproduct unloading program.
3PrOd: 3 products batching.
6PrOd: 6 products batching.
14PrOd: 14 product batching.
MULtI : no program.

- Set the weight reading mode (except for rI P or tOtAL program):

  - CELL: the weight is received either by load cells or intelligent junction boxes or transmitters connected to the instrument.
  - SErI AL: the weight is received via serial port (**WEIMOD** or **WEIRIP** mode).

- Set the approval status (only if rI P or tOtAL have not been set)

  - nOtLEG: not approved program;
  - LEGAL: approved program, single interval*;
  - LEGMI : approved program, multi-interval*;
  - LEGMr: approved program, multiple range*;

  * *Contact technical assistance to request the proper manual and the correct procedures for approval, indicating mandatory hardware code and serial number (see section **INSTRUMENT COMMISSIONING**).*

- Set the active regulation on the instrument (only if nOtLEG have not been set):

  - OI ML: approved program according to EN45501:2015 and OIML R76:2006 for UE;
  - ntEP: approved program according to NIST Handbook 44; NCWM PUB 14 for North America (NTEP).

When a W series instrument is used in combination with an intelligent junction box or a weight transmitter, the approval status set on both devices must be the same.

- Configure the connection to the CLM serie intelligent junction box or to the weight transmitter (only if SErI AL or rI P have not been set):

  - ESTYES: intelligent junction box or transmitter connected to the instrument
  - ESTnO: no intelligent junction box or transmitter connected

By confirming, the instrument is restored to default and data is erased.

If you do not have a specific manual for the newly set program, you can request it to technical assistance.

KEYPAD OR DISPLAY LOCKING

Press ESC immediately followed by ▲ hold them down for about 5 seconds (this operation is also possible via the MODBUS and ASCII protocols):

- FrEE: no lock.
- HEY: keypad lock: if active, when a key is pressed the message bLOC is displayed for 3 seconds.
- dI SP: keypad and display lock: if active, the kaypad is locked and the display shows the instrument model (weight is not displayed); by pressing a key the display shows bLOC for 3 seconds.

DECLARATION OF CONFORMITY - EU

LAUMAS
Innovation in Weighing

SISTEMI DI PESATURA INDUSTRIALE - CELLE DI CARICO - BILANCE

LAUMAS Elettronica S.r.l.
Via I Maggio 6 - 43022 Montechiarugolo (PR) Italy
C.F. - P.IVA IT01661140341

Tel. (+39) 0521 683124
Fax (+39) 0521 681091

Email: laumas@laumas.it
Web: http://www.laumas.com

Fabbricante metrico Prot. N. 7340 Parma - R.E.A. PR N. 169833 - Reg. Imprese PR N.19393 - Registro Nazionale Pile N. IT09060P00000982 - Registro A.E.E. N. IT08020000002494 - N. Mecc. PR 008385 - Cap. Sociale € 100.000 int. vers.

SISTEMA QUALITÀ CERTIFICATO UNI EN ISO 9001 - SISTEMA GESTIONE AMBIENTALE ISO 14001 - MODULO D: GARANZIA DELLA QUALITÀ DEL PROCESSO DI PRODUZIONE

I	Dichiarazione di conformità	Dichiariamo che il prodotto al quale la presente dichiarazione si riferisce è conforme alle norme di seguito citate.
GB	Declaration of conformity	We hereby declare that the product to which this declaration refers conforms with the following standards.
E	Declaración de conformidad	Manifestamos en la presente que el producto al que se refiere esta declaración está de acuerdo con las siguientes normas
D	Konformitäts-erklärung	Wir erklären hiermit, dass das Produkt, auf das sich diese Erklärung bezieht, mit den nachstehenden Normen übereinstimmt.
F	Déclaration de conformité	Nous déclarons avec cela responsabilité que le produit, auquel se rapporte la présente déclaration, est conforme aux normes citées ci-après.
CZ	Prohlášení o shode	Tímto prohlašujeme, že výrobek, kterého se toto prohlášení týká, je v souladu s níže uvedenými normami.
NL	Conformiteit-verklaring	Wij verklaren hiermede dat het product, waarop deze verklaring betrekking heeft, met de hierna vermelde normen overeenstemt.
P	Declaração de conformidade	Declaramos por meio da presente que o produto no qual se refere esta declaração, corresponde às normas seguintes.
PL	Deklaracja zgodności	Niniejszym oświadczamy, że produkt, którego niniejsze oświadczenie dotyczy, jest zgodny z poniższymi normami.
RUS	Заявление о соответствии	Мы заявляем, что продукт, к которому относится данная декларация, соответствует перечисленным ниже нормам.

Models: WDOS

Mark Applied	EU Directive	Standards
CE	**2014/35/EU** Low Voltage Directive	*Not Applicable (N/A)* for VDC type EN 61010-1:2010+A1:2019 for 230/115 VAC type
CE	**2014/30/EU** EMC Directive	EN 55011:2016+A1+A11:2020 EN 61000-6-2:2019 EN 61000-6-4:2019 EN 61000-4-2:2009 EN 61000-4-3:2006+A2:2010 EN 61000-4-4:2012 EN 61000-4-5:2014+A1:2017 EN 61000-4-6:2014
CE M (only if "M" mark is applied)	**2014/31/EU** NAWI Directive	EN 45501:2015 OIML R76-1:2006

Montechiarugolo (PR), 22/11/2022

LAUMAS Elettronica s.r.l.
M. Consonni
(*Legal Representative*)

DECLARATION OF CONFORMITY - UKCA

LAUMAS
Innovation in Weighing

SISTEMI DI PESATURA INDUSTRIALE - CELLE DI CARICO - BILANCE

LAUMAS Elettronica S.r.l.
Via I Maggio 6 - 43022 Montechiarugolo (PR) Italy
C.F. - P.IVA IT01661140341

Tel. (+39) 0521 683124
Fax (+39) 0521 681091

Email: laumas@laumas.it
Web: http://www.laumas.com

Fabbricante metrico Prot. N. 7340 Parma - R.E.A. PR N. 169833 - Reg. Imprese PR N.19393 - Registro Nazionale Pile N. IT09060P00000982 - Registro A.E.E. N. IT08020000002494 - N. Mecc. PR 008385 - Cap. Sociale € 100.000 int. vers.

SISTEMA QUALITÀ CERTIFICATO UNI EN ISO 9001 - SISTEMA GESTIONE AMBIENTALE ISO 14001 - MODULO D: GARANZIA DELLA QUALITÀ DEL PROCESSO DI PRODUZIONE

I	Dichiarazione di conformità	Dichiariamo che il prodotto al quale la presente dichiarazione si riferisce è conforme alle norme di seguito citate.
GB	Declaration of conformity	We hereby declare that the product to which this declaration refers conforms with the following standards.
E	Declaración de conformidad	Manifestamos en la presente que el producto al que se refiere esta declaración está de acuerdo con las siguientes normas
D	Konformitäts-erklärung	Wir erklären hiermit, dass das Produkt, auf das sich diese Erklärung bezieht, mit den nachstehenden Normen übereinstimmt.
F	Déclaration de conformité	Nous déclarons avec cela responsabilité que le produit, auquel se rapporte la présente déclaration, est conforme aux normes citées ci-après.
CZ	Prohlášení o shode	Tímto prohlašujeme, že výrobek, kterého se toto prohlášení týká, je v souladu s níže uvedenými normami.
NL	Conformiteit-verklaring	Wij verklaren hiermede dat het product, waarop deze verklaring betrekking heeft, met de hierna vermelde normen overeenstemt.
P	Declaração de conformidade	Declaramos por meio da presente que o produto no qual se refere esta declaração, corresponde às normas seguintes.
PL	Deklaracja zgodności	Niniejszym oświadczamy, że produkt, którego niniejsze oświadczenie dotyczy, jest zgodny z poniższymi normami.
RUS	Заявление о соответствии	Мы заявляем, что продукт, к которому относится данная декларация, соответствует перечисленным ниже нормам.

Models: WDOS

Mark Applied	UK legislation	Standards
UK CA	**Electrical Equipment (Safety) Regulations 2016**	*Not Applicable (N/A)* for VDC type BS EN 61010-1:2010+A1:2019 for 230/115 VAC type
UK CA	**Electromagnetic Compatibility Regulations 2016**	BS EN 55011:2016+A1+A11:2020 BS EN 61000-6-2:2019 BS EN 61000-6-4:2019 BS EN 61000-4-2:2009 BS EN 61000-4-3:2006+A2:2010 BS EN 61000-4-4:2012 BS EN 61000-4-5:2014+A1:2017 BS EN 61000-4-6:2014
UK CA M (only if "M" mark is applied)	**Non-automatic Weighing Instruments Regulations 2016**	BS EN 45501:2015

Montechiarugolo (PR), 22/11/2022

LAUMAS Elettronica s.r.l.
M. Consonni
(*Legal Representative*)

On our website www.laumas.com there are videos on the guidelines for correct installation of weighing systems and video tutorials on configuring our transmitters and weight indicators.

All Laumas product manuals are available online. You can download the manuals in PDF format from www.laumas.com by consulting the Products section or the Download Area.
Registration is required.

Think about the environment before you print!
CERTIFICATION OF THE ENVIRONMENTAL MANAGEMENT SYSTEM
in accordance with UNI EN ISO 14001.
Laumas contributes to environmental protection by saving on paper consumption.